INONET
A EUROTECH COMPANY

Product Catalog

Published: 13. October 2026

are a fundamental building block for innovation and progress
19″ Systems

systems tailored to your application and requirements
Embedded IPC

as a link between people, machines and the cloud
Gateways

for the development of advanced driver assistance systems (ADAS)
and autonomous driving (AD) functions
Automotive

Panel PCs and Displays – interface between humans and machines
HMI





Developer and manufacturer of Industrial PCs

Engineering the Future – built to last, designed for you

InoNet **develops and manufactures** industrial computers according to customer specifications. Since 1998, the focus has been on developing solutions tailored to the specific **customer application**.

Short reaction and development times as well as **open communication** characterize our work. Thanks to our turnkey solutions, your product arrives **ready for use**. This allows you to focus on what is important – your own application in the long term.

Our systems are used in a wide range of industries, including **manufacturing, automotive, medical technology, logistics and transportation** and are designed for fail-safe continuous operation.

Since 2022, InoNet Computer has been the **German subsidiary of Eurotech S.p.A.**, a global provider of edge computing and IIoT platforms with a focus on cybersecurity.

- Founded in 1998
- Development & Manufacturing
- DIN ISO certified since 1999
- 100,000+ systems worldwide
- Made in Germany

Table of Contents

19" Systems



Robust industrial computers for rack mounting, flexibly configurable

Embedded IPC



Compact, fanless box PCs and active cooled high-performance computers

Gateways



Industrial Gateways as a link between people, machines and the cloud

Automotive



Scalable computing solutions for ADAS/AD in vehicle development

HMI



Panel PCs & Displays – Human-Machine Interface

InoNet Competences and Services

Consulting | *Development* | *Testing* | *Customization* | *Manufacturing* | *Certifications*

ISO 9001

InoNet Computer GmbH
Wettersteinstraße 18
82024 Taufkirchen, Germany
www.inonet.com

Published: 13. October 2026, 08:44. Subject to be change without prior notice.



InoNet 19“ Industrial Computers

InoNet 19“ rackmount PCs are designed for a wide range of applications in many industries, including plant automation, automotive, transportation, and industrial image and video processing. InoNet specializes in the design and manufacture of high quality, fail-safe computer systems that are individually tailored to meet specific customer requirements. Carefully selected components ensure the high quality of our systems. Our rackmount industrial PCs are modularly adaptable and can thus be tailored to any specific requirement.

Mainboard Systems

Even in small quantities, our 19“ systems offer an extremely high degree of flexibility. Server performance or cost-optimized design, regular hardware or 100% industry-hard components: we configure the system that perfectly fits your application.

Backplane Systems

Whenever many expansion slots are needed, backplane systems from InoNet are the right choice. By replacing the slot CPU, the systems also offer a high degree of flexibility over the entire life cycle.

1U, 2U, 4U

Our systems are available in 1U, 2U and 4U. The system fits exactly to its place of use and without compromising the hardware.

NICI-Design

With our unique Next-InoNet-Computer-Innovation-Design (NICI-Design), we can quickly and cost-effectively customize 19 inch PCs to meet your needs.



Overview 19“ Systems

Robust industrial computers for rack mounting, flexibly configurable

4 U

Magnius®-SIIF-Q670E	Intel® Core™ i	Mainboard	Industrial	Air Cooled
Magnius®-SII-Q670E	Intel® Core™ i	Mainboard	Industrial	Air Cooled
Mayflower®-II-AM5	AMD® Ryzen™	Mainboard	Industrial	Air Cooled
Mayflower®-II-C621	Intel® Xeon®	Mainboard	DataCenter	Air Cooled
Mayflower®-II-U200	Intel® Core™ Ultra	Mainboard	Industrial	Air Cooled
Mayflower®-II-Q670E	Intel® Core™ i	Mainboard	Industrial	Air Cooled
Mayflower®-II-R680E - GPU Server	Intel® Core™ i	Mainboard	DataCenter	Air Cooled
Mayflower®-II-SP5 - GPU Server	AMD® EPYC™	Mainboard	DataCenter	Air Cooled
Mayflower®-IISF-U200	Intel® Core™ Ultra	Mainboard	Industrial	Air Cooled
Mayflower®-IISF-Q670E	Intel® Core™ i	Mainboard	Industrial	Air Cooled
Mayflower®-LLM18-SP3	AMD® EPYC™	Mainboard	DataCenter	Air Cooled
Mayflower®-LLMW33-SP3	AMD® EPYC™	Mainboard	DataCenter	Hybrid Cooled

2 U

Magnius®-SIDF-Q670E	Intel® Core™ i	Mainboard	Industrial	Air Cooled
Magnius®-SID-Q670E	Intel® Core™ i	Mainboard	Industrial	Air Cooled
Mayflower®-ID-AM5 - GPU Server	AMD® EPYC™/Ryzen™	Mainboard	DataCenter	Air Cooled
Mayflower®-ID-U200	Intel® Core™ Ultra	Mainboard	Industrial	Air Cooled
Mayflower®-ID-Q670E	Intel® Core™ i	Mainboard	Industrial	Air Cooled
Mayflower®-IDF-U200	Intel® Core™ Ultra	Mainboard	Industrial	Air Cooled
Mayflower®-IDF-Q670E	Intel® Core™ i	Mainboard	Industrial	Air Cooled
Mayflower®-IDS-Q670E	Intel® Core™ i	Mainboard	Industrial	Air Cooled

1 U

Mayflower®-I-H420E	Intel® Core™ i	Mainboard	Industrial	Air Cooled

Published: 13. October 2026, 08:44. Subject to be change without prior notice.

INONET
A EUROTECH COMPANY

INONET
A EUROTECH COMPANY

Magnius®-SIIF-Q670E

19“ 4U Industrial PC – low-cost entry model with Intel® Core™ i CPUs 13th Generation and front-side interfaces

Features

- ↗ *High-Performance with Intel® Core™ i CPUs 13th Generation*
- ↗ *7x full-size expansion slots*
- ↗ *Robust full-industrial components*
- ↗ *Interfaces accessible from the front*
- ↗ *2x 5.25“ and 6x 3.5“ drive bays*
- ↗ *Drive cage in anti-vibration design*

Configuration example

Further configurations on request!

Mainboard:
Industrial Mainboard (ATX)
24/7 operation, long-term available

Processor:
Intel® Core™ i 13th Generation
Chipset: Intel® Q670E

Memory:
4x DDR5 DIMM, max. 128 GB

Graphic:
Onboard Intel® UHD 730/770
(depending on CPU)

Drive Bays:
Internal
6x 3.5“
External
2x 5.25“

Environment:
Operating Temperature
0° ~ 50° C*
Storage Temperature
-40° ~ 85° C
Relative Humidity (operation)
0 ~ 90 % (non condensing)

Power Supply:
90 ~ 264 VAC, 400 Watt
PS2 ATX, 80 Plus

Expansions:
1x M.2 (M-key, Type: 2242/2280)
1x M.2 (M-key, Type: 2280)
1x M.2 (B-key, Type: 3042/3052)
1x PCIe x16 (Gen 5)
1x PCIe x16 (Gen 4), 4 Lanes
1x PCIe x4 (Gen 4)
1x PCIe x1 (Gen 3)
3x PCI

Mechanical:
Chassis
19 inch 4U rackmount chassis
Dimensions (W x H x D)
426 x 177 x 381.6 mm
Cooling
Active,
1x 120 mm fan and 2x 80 mm fans

I/O:
Front
2x 1 GBit LAN (RJ45)
2x USB 3.2 (Gen 2)
2x USB 3.2 (Gen 1)
2x USB 2.0
1x RS-232/422/485
2x DisplayPort 1.4
2x HDMI 2.0
3x Audio (Line-Out, Line-In, Mic)
Internal
1x USB 2.0 Typ A
1x GPIO Header (8 Bit)

Operating System:
Microsoft® Windows® 10/11, Linux®

Features:
Watchdog Timer
TPM 2.0 (onboard)



* Ambient temperature at full expansion at full load in 24/7 operation: 0° ~ 40° C

Published: 28. August 2025, 16:27. Subject to be change without prior notice.

INONET
A EUROTECH COMPANY

Magnius®-SIIF-Q670E

Additional illustrations



Front view



Side view

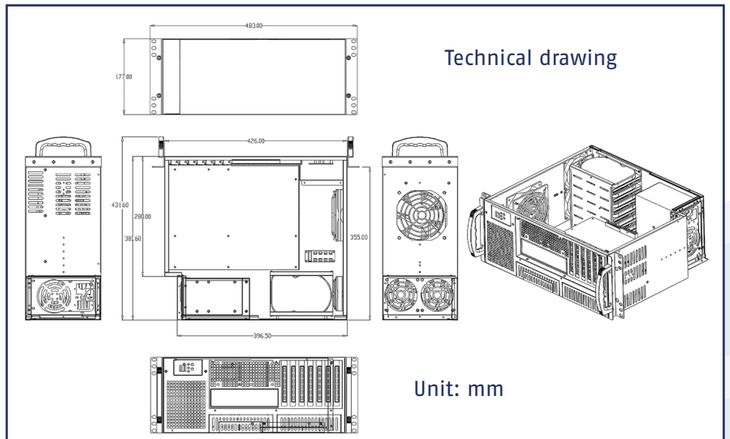

Technical drawing

Unit: mm

InoNet Competences and Services

Consulting | *Development* | *Testing* | *Customization* | *Manufacturing* | *Certifications*

InoNet Computer GmbH
Wettersteinstraße 18
82024 Taufkirchen, Germany
www.inonet.com

www.inonet.com | Tel.: +49 89 / 666 096 - 0 | sales@inonet.com

Published: 28. August 2025, 16:27. Subject to be change without prior notice.

INONET
A EUROTECH COMPANY

Magnius®-SII-Q670E

19“ 4U Industrial PC – low-cost entry model with Intel® Core™ i CPUs 13th Generation

Features

- High-Performance with Intel® Core™ i CPUs 13th Generation
- 7x full-size expansion slots
- Robust full-industrial components
- Case with lockable front door and handles
- 2x 5.25“ and 8x 3.5“ drive bays
- Drive cage in anti-vibration design, hold-downs clamps and replaceable air filters

Configuration example

Further configurations on request!

Mainboard:
Industrial Mainboard (ATX)
24/7 operation, long-term available

Processor:
Intel® Core™ i 13th Generation
Chipset: Intel® Q670E

Memory:
4x DDR5 DIMM, max. 128 GB

Graphic:
Onboard Intel® UHD 730/770
(depending on CPU)

Drive Bays:
Internal
7x 3.5“
External
2x 5.25“, 1x 3.5“

Environment:
Operating Temperature
0° ~ 50° C*
Storage Temperature
-40° ~ 85° C
Relative Humidity (operation)
0 ~ 90 % (non condensing)

Power Supply:
90 ~ 264 VAC, 400 Watt
PS2 ATX, 80 Plus

Expansions:
1x M.2 (M-key, Type: 2242/2280)
1x M.2 (M-key, Type: 2280)
1x M.2 (B-key, Type: 3042/3052)
1x PCIe x16 (Gen 5)
1x PCIe x16 (Gen 4), 4 Lanes
1x PCIe x4 (Gen 4)
1x PCIe x1 (Gen 3)
3x PCI

Mechanical:
Chassis
19 inch 4U rackmount chassis
Dimensions (W x H x D)
427 x 177 x 450 mm
Cooling
Active, 1x 120 mm fan

I/O:
Back
2x 1 GBit LAN (RJ45)
2x USB 3.2 (Gen 2)
2x USB 3.2 (Gen 1)
1x RS-232/422/485
2x DisplayPort 1.4
2x HDMI 2.0
3x Audio (Line-Out, Line-In, Mic)
Front
2x USB 2.0
Internal
1x USB 2.0 Typ A
1x GPIO Header (8 Bit)

Operating System:
Microsoft® Windows® 10/11, Linux®

Features:
Watchdog Timer
TPM 2.0 (onboard)



* Ambient temperature at full expansion at full load in 24/7 operation: 0° ~ 40° C

Published: 22. March 2024, 13:49. Subject to be change without prior notice.

INONET
A EUROTECH COMPANY

Magnius®-SII-SII-Q670E

Additional illustrations



Rear view



Front view (open)

Technical drawing

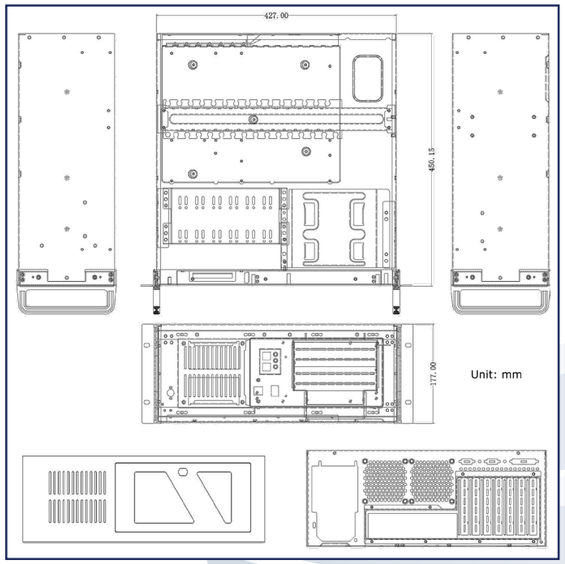

InoNet Competences and Services

Consulting | *Development* | *Testing* | *Customization* | *Manufacturing* | *Certifications*

InoNet Computer GmbH
Wettersteinstraße 18
82024 Taufkirchen, Germany
www.inonet.com

www.inonet.com | Tel.: +49 89 / 666 096 - 0 | sales@inonet.com

Published: 22. March 2024, 13:49. Subject to be change without prior notice.

INONET
A EUROTECH COMPANY

Mayflower®-II-AM5

Rugged 19" system (4U) with powerful AMD® Ryzen™ CPU for industrial environments

Features

- *High-Performance with AMD® Ryzen™ 7000 CPUs*
- *Capable for complex system configurations*
- *Robust full industrial components for 24/7 operation*
- *Drive cages in anti-vibration design, hold-downs clamps and washable air filters*

Configuration example

Further configurations on request!

Mainboard:
Industrial Mainboard (ATX)
24/7 operation, long-term available

Processor:
AMD® Ryzen™ 7000 series
Socket: AM5

Memory:
4x DDR4 DIMM, max. 128GB

Graphic:
Onboard AMD® Radeon™

Drive Bays:
Internal
2x M.2 (M-key, type: 2280)
3x 3.5"
External
3x 5.25", 1x 3.5"

Environment:
Operating Temperature
0° ~ 50° C*
Storage Temperature
-40° ~ 80° C
Relative Humidity (operation)
0 ~ 95 % (non condensing)

Power Supply:
90 ~ 264 VAC, 400 Watt, 80 Plus
On request: Redundant power supplies for AC and DC

Expansions:
1x PCIe x16 (Gen 5), full height
1x PCIe x4 (Gen 5), full height
1x PCIe x4 (Gen 4), full height
1x PCIe x1 (Gen 3), full height
1x PCI, full height

Mechanical:
Chassis
19 inch 4U rackmount chassis
Dimensions (W x H x D)
430 x 176 x 465 mm
Cooling
Active, 1x 120 mm fans

I/O:
Back
2x 2.5 GBit LAN (RJ45)
4x USB 3.2 (Gen 2)
2x USB 3.2 (Gen 1)
1x RS-232/422/485
1x RS-232
4x RS-232 (optional)
1x DisplayPort
1x HDMI 2.1
3x Audio (Line-In, Line-Out, Mic)
Front
2x USB 2.0
Internal
2x USB 2.0 type A
1x GPIO Header (8 Bit)

Operating System:
Microsoft® Windows® 10/11, Linux®

Features:
Watchdog Timer
TPM 2.0

*Ambient temperature at full expansion at full load in 24/7 operation: 0°~40°C



Published: 20. June 2025, 10:22. Subject to be change without prior notice.

INONET
A EUROTECH COMPANY

Mayflower®-II-AM5

Additional illustrations



Rear view



Front view (open)

InoNet Competences and Services

Consulting | *Development* | *Testing* | *Customization* | *Manufacturing* | *Certifications*

InoNet Computer GmbH
Wettersteinstraße 18
82024 Taufkirchen, Germany
www.inonet.com

www.inonet.com | Tel.: +49 89 / 666 096 - 0 | sales@inonet.com

Published: 20. June 2025, 10:22. Subject to be change without prior notice.

INONET
A EUROTECH COMPANY

Mayflower®-II-C621

19" 4U high-performance server for power-intensive applications with Intel® Xeon® CPU and 7 PCIe slots

Features

- *High-Performance with Intel® Xeon® Scalable CPU*
- *Up to 7x PCIe slots for expansion cards*
- *Robust full industrial components for 24/7 operation*
- *Externally accessible 2x 2.5" shuttles for SSDs*

Configuration example

Further configurations on request!

Mainboard:
Industrial Mainboard (ATX)
24/7 operation, long-term available

Processor:
Intel® Xeon® Scalable (2. Gen)
Chipset: Intel® C621

Memory:
6x DDR4 DIMM, max. 2933 MHz
RDIMM/LRDIMM: max. 768 GB

Graphic:
OnBoard AST2510, 1 GB DDR4

Drive Bays:
Internal
1x M.2 (M-key, type: 2280)
External
2x 2.5" SATA-III SSDs in shuttle
3x 5.25"

Operating System:
Microsoft® Windows® Server/10/11
Linux®

Features:
Watchdog Timer
TPM 2.0 support

Power Supply:
90 ~ 264 VAC, 500 Watt, 80 Plus
On request: Redundant power supplies for AC and DC

Expansions:
2x PCIe x16 or 4x PCIe x8 (Gen 3)
1x PCIe x8 (Gen 3)
1x PCIe x4 (Gen 3)
1x PCIe x1 (Gen 3)
Full height

Mechanical:
Chassis
19" 4U rackmount chassis
Dimensions (W x H x D)
483 x 177 x 510 mm
Cooling
active, 1x 120 mm fan
second 120 mm fan optional

I/O:
Back
2x 1 GBit LAN (RJ45)
4x USB 3.0
2x USB 2.0
1x RS-232
1x VGA
Front
2x USB 3.0
Internal
1x USB 2.0 (type A)
1x GPIO Header (8 Bit)

Environment:
Operating Temperature
0° ~ 50° C
Storage Temperature
-20° ~ 70° C
Relative Humidity
10 ~ 90 % (non condensing)
IP Protection
IP20



Published: 16. January 2025, 13:26. Subject to be change without prior notice.

INONET
A EUROTECH COMPANY

Mayflower®-II-C621

Additional illustrations



Front view (open)



Rear view

Technical drawing

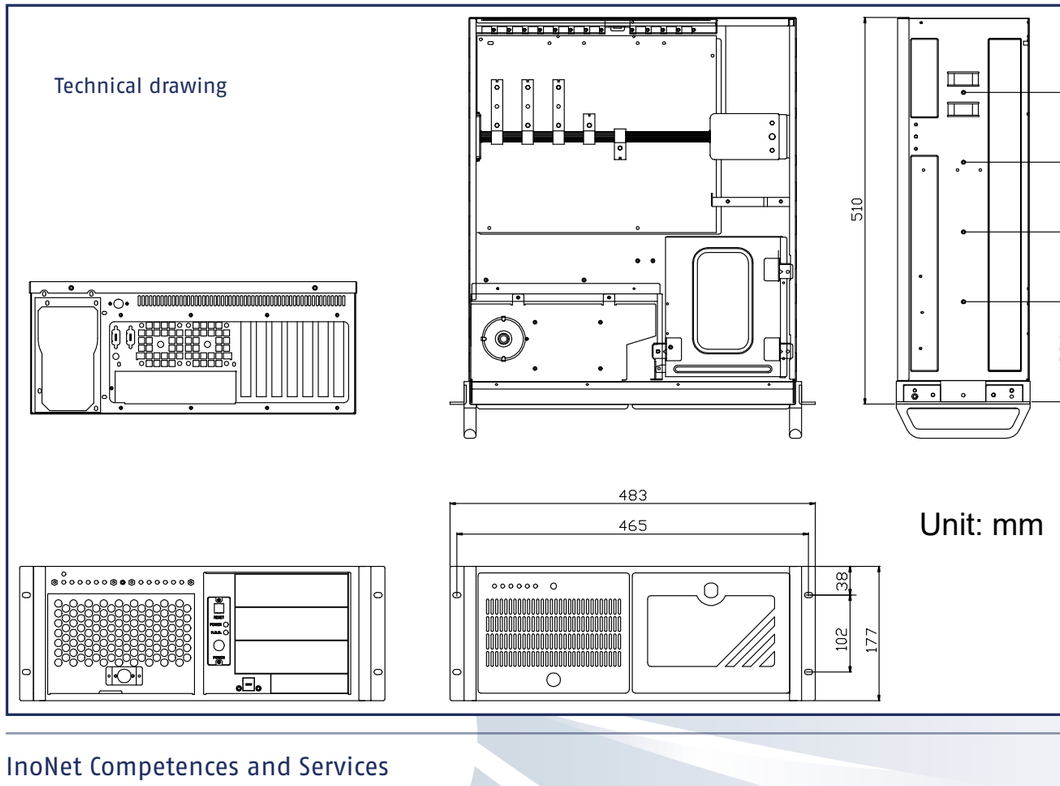

Unit: mm

InoNet Competences and Services

Consulting | *Development* | *Testing* | *Customization* | *Manufacturing* | *Certifications*

InoNet Computer GmbH
Wettersteinstraße 18
82024 Taufkirchen, Germany
www.inonet.com

www.inonet.com | Tel.: +49 89 / 666 096 - 0 | sales@inonet.com

Published: 16. January 2025, 13:26. Subject to be change without prior notice.

INONET
A EUROTECH COMPANY

Mayflower®-II-U200

High quality 19“ 4U system for demanding industrial applications in harsh environments

Features

- *High-Performance with Intel® Core™ Ultra CPUs*
- *Perfect for complex system configurations*
- *Up to 7x slots for expansion cards*
- *Robust full industrial components for 24/7 operation*
- *Drive cages in anti-vibration design, hold-downs clamps and washable air filters*

Configuration example

Further configurations on request!

Mainboard:
Industrial Mainboard (ATX)
24/7 operation, long-term available

Processor:
Intel® Core™ Ultra, 200 series
Chipset: Intel® Q870

Memory:
4x DDR5 UDIMM, max. 256 GB

Graphic:
Onboard Intel® Iris® Xe
(depending on CPU)

Drive Bays:
Internal
1x M.2 (M-key, type: 2280)
1x M.2 (M-key,
type: 2242/2260/2280/22110)
3x 3.5“
External
3x 5.25“, 1x 3.5“

Environment:
Operating Temperature
0° ~ 45° C*
Storage Temperature
-40° ~ 85° C
Relative Humidity (operation)
0 ~ 95 % (non condensing)

Power Supply:
90 ~ 264 VAC, 500 Watt, 80 Plus
On request: Redundant power supplies for AC and DC

Expansions:
1x M.2 (B-key, type: 3042/3052)
1x M.2 (E-key, type: 2230)
1x SIM slot
2x PCIe x16 (Gen 5)
2x PCIe x4 (Gen 4)
3x PCIe x1 (Gen 4)

Mechanical:
Chassis
19 inch 4U rackmount chassis
Dimensions (W x H x D)
430 x 176 x 465 mm
Cooling
Active, 1x 120 mm fans
2x 80 mm fans (optional)

I/O:
Back
3x 2.5 GBit LAN (RJ45)
6x USB 3.2 (Gen 2)
1x RS-232/422/485
1x DisplayPort 1.4a
2x HDMI 2.1
1x VGA
3x Audio (Line-Out, Line-In, Mic)
Front
2x USB 3.2 (Gen 1)
Internal
1x USB 2.0 type A
1x USB 3.2 (Gen 1) type A
1x GPIO Header (8 Bit)

Operating System:
Microsoft® Windows® 10/11, Linux®

Features:
Watchdog Timer, TPM (Intel® PTT)

*Ambient temperature at full expansion at full load in 24/7 operation: 0°~40°C



Published: 27. July 2026, 10:38. Subject to be change without prior notice.

INONET
A EUROTECH COMPANY

Mayflower®-II-U200

Additional illustrations



Rear view



Front view (open)

InoNet Competences and Services

Consulting | *Development* | *Testing* | *Customization* | *Manufacturing* | *Certifications*

InoNet Computer GmbH
Wettersteinstraße 18
82024 Taufkirchen, Germany
www.inonet.com

www.inonet.com | Tel.: +49 89 / 666 096 - 0 | sales@inonet.com

Published: 27. July 2026, 10:38. Subject to be change without prior notice.

INONET
A EUROTECH COMPANY

Mayflower®-II-Q670E

High quality 19“ 4U system for demanding industrial applications in harsh environments

Features

- *High-Performance with Intel® Core™ i CPUs 12th/13th/14th Generation*
- *Perfect for complex system configurations*
- *Up to 7x slots for expansion cards*
- *Robust full industrial components for 24/7 operation*
- *Drive cages in anti-vibration design, hold-downs clamps and washable air filters*

Configuration example

Further configurations on request!

Mainboard:
Industrial Mainboard (ATX)
24/7 operation, long-term available

Processor:
Intel® Core™ i 12th/13th/14th Generation
Chipset: Intel® Q670E

Memory:
4x DDR5 DIMM, max. 192 GB

Graphic:
Onboard Intel® UHD 730/770
(depending on CPU)

Drive Bays:
Internal
1x M.2 (M-key, type: 2280)
1x M.2 (M-key, type: 2242/2280)
3x 3.5“
External
3x 5.25“, 1x 3.5“

Operating System:
Microsoft® Windows® 10/11, Linux®

Features:
Watchdog Timer, Intel® AMT 12.0
TPM 2.0

Power Supply:
90 ~ 264 VAC, 500 Watt, 80 Plus
On request: Redundant power supplies for AC and DC

Expansions:
1x M.2 (B-key, type: 3042/3052)
1x PCIe x16 (Gen 5)
1x PCIe x16 (Gen 4), 4 Lanes
1x PCIe x4 (Gen 4)
1x PCIe x1 (Gen 3)
3x PCI

Mechanical:
Chassis
19 inch 4U rackmount chassis
Dimensions (W x H x D)
430 x 176 x 465 mm
Cooling
Active, 1x 120 mm fans
2x 80 mm fans (optional)

I/O:
Back
2x 1 GBit LAN (RJ45)
2x USB 3.2 (Gen 2)
2x USB 3.2 (Gen 1)
1x RS-232/422/485
2x DisplayPort 1.4
2x HDMI 2.0
3x Audio (Line-Out, Line-In, Mic)
Front
2x USB 3.2 (Gen 1)
Internal
2x USB 2.0 type A
1x GPIO Header (8 Bit)

Environment:
Operating Temperature
0° ~ 45° C*
Storage Temperature
-40° ~ 85° C
Relative Humidity (operation)
0 ~ 95 % (non condensing)

*Ambient temperature at full expansion at full load in 24/7 operation: 0°~40°C



Published: 27. July 2026, 10:38. Subject to be change without prior notice.

INONET
A EUROTECH COMPANY

Mayflower®-II-Q670E

Additional illustrations



Rear view



Front view (open)

InoNet Competences and Services

Consulting | *Development* | *Testing* | *Customization* | *Manufacturing* | *Certifications*

InoNet Computer GmbH
Wettersteinstraße 18
82024 Taufkirchen, Germany
www.inonet.com

www.inonet.com | Tel.: +49 89 / 666 096 - 0 | sales@inonet.com

Published: 27. July 2026, 10:38. Subject to be change without prior notice.

INONET
A EUROTECH COMPANY

Mayflower®-II-R680E - GPU Server

19" 4U GPU Server with NVIDIA® RTX PRO™ 6000 Blackwell Max-Q Workstation Edition GPU and Intel® Core™ i CPUs 12th/13th/14th Generation

Features

- *High-Performance with Intel® Core™ i CPUs 12th/13th/14th Generation*
- *High-End GPU: NVIDIA® RTX PRO™ 6000 Blackwell Max-Q Workstation Edition*
- *Up to 5x slots for expansion cards*
- *Robust full industrial components for 24/7 operation*
- *Hold-downs clamps and washable air filters*



Configuration example

Further configurations on request!

Mainboard:
Industrial Mainboard (ATX)
24/7 operation, long-term available

Processor:
Intel® Core™ i 12th/13th/14th Generation
Intel® Core™ (Bartlett Lake-S Hybrid)
Chipset: Intel® R680E

Memory:
4x DDR5 UDIMM, max. 192 GB

Graphic:
Intel® UHD 730/770 (integrated in CPU)

GPU:
1x NVIDIA® RTX PRO™ 6000 Blackwell Max-Q Workstation Edition
PCIe x16, 96 GB GDDR7 with ECC
4x DisplayPort 2.1b
24064 CUDA Cores

AI Performance:
Single-Precision power: 110 TFLOPs
RT Core-Performance: 333 TFLOPs
AI: 3511 TOPS

Drive Bays:
Internal
2x M.2 (M-key, type: 2242/2260/2280)
1x 2.5"
External
2x 5.25"

Operating System:
Microsoft® Windows® 10/11, Linux®

Features:
Watchdog Timer
Intel® AMT, TPM 2.0

Power Supply:
90 ~ 264 VAC, 1200 Watt, 80 Plus

Expansions:
1x M.2 (E-key, type: 2230)
1x M.2 (A-key, type: 2242)
2x PCIe x16 (Gen 4)
(1x used by NVIDIA® GPU)
3x PCIe x4 (Gen 4)
(1x covered by NVIDIA® GPU)
1x PCIe x4 (Gen 3)
1x PCI

Mechanical:
Chassis
19 inch 4U rackmount chassis
Dimensions (W x H x D)
430 x 176 x 468 mm
Cooling
Active, 2x 120 mm fans
2x 80 mm fans

I/O:
Back
3x 2.5 GBit LAN (RJ45)
1x 1 GBit LAN (RJ45)
4x USB 3.2 (Gen 2)
4x USB 3.2 (Gen 1)
2x DisplayPort (DP++)
1x HDMI 2.0a
1x VGA
2x Audio (Line-Out, Mic)
Front
2x USB 3.2 (Gen 1)
1x USB-C 3.2 (Gen 1)
Internal
2x USB 2.0 type A
2x GPIO Header (8 Bit)

Environment:
Operating Temperature
0° ~ 50° C*
Storage Temperature
-20° ~ 80° C
Relative Humidity (operation)
10 ~ 90 % (non condensing)

Published: 16. December 2025, 08:46. Subject to be change without prior notice.

INONET
A EUROTECH COMPANY

Mayflower®-II-R680E - GPU Server

Additional illustrations

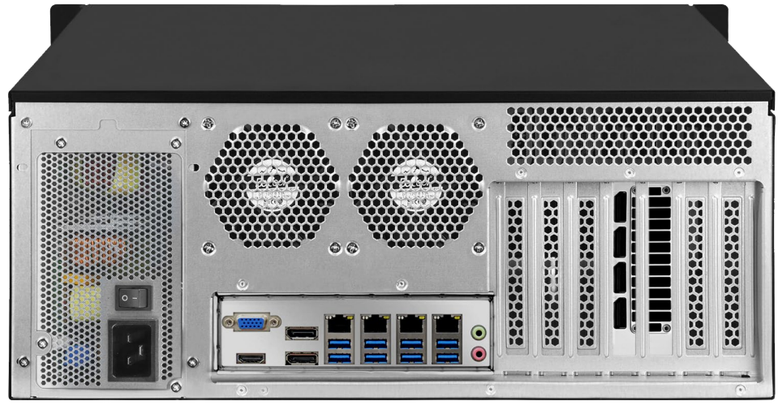

Rear view



Front view (open)

InoNet Competences and Services

Consulting | *Development* | *Testing* | *Customization* | *Manufacturing* | *Certifications*

InoNet Computer GmbH
Wettersteinstraße 18
82024 Taufkirchen, Germany
www.inonet.com

www.inonet.com | Tel.: +49 89 / 666 096 - 0 | sales@inonet.com

Published: 16. December 2025, 08:46. Subject to be change without prior notice.

INONET
A EUROTECH COMPANY

Mayflower®-II-SP5 - GPU Server

19" 4U GPU Server with 2x NVIDIA® RTX PRO™ 6000 Blackwell Max-Q Workstation Edition GPU and AMD® EPYC™ 9005/9004 CPU

Features

- *High-Performance with AMD® EPYC™ 9005/9004 CPU*
- *2x High-End GPU: NVIDIA® RTX PRO™ 6000 Blackwell Max-Q Workstation Edition (on request: up to 3x GPU)*
- *2x PCIe x16 slots for expansion cards*
- *Robust full industrial components for 24/7 operation*
- *Hold-downs clamps and washable air filters*

Configuration example

Further configurations on request!

Mainboard:
Industrial Mainboard (CEB)
24/7 operation, long-term available

Processor:
AMD® EPYC™ 9005/9004
Socket: SP5

Memory:
8x DDR5 DIMM, max. 4800 MHz
RDIMM, max. 4 TB

Graphic:
Onboard AST2600, 512 MB DDR4

GPU:
2x NVIDIA® RTX PRO™ 6000 Blackwell Max-Q Workstation Edition
PCIe x16, 96 GB GDDR7 with ECC
4x DisplayPort 2.1b
24064 CUDA Cores
On request: up to 3x GPU

AI Performance (per GPU):
Single-Precision power: 110 TFLOPs
RT Core-Performance: 333 TFLOPs
AI: 3511 TOPS

Drive Bays:
Internal
1x M.2 (M-key, Typ: 2280)
1x M.2 (M-key, Typ: 22110/2280)
2x 3.5"
4x 2.5"

Power Supply:
90 ~ 264 VAC, 2000 Watt, 80 Plus

Expansions:
4x PCIe x16 (Gen 5)
(2x used by NVIDIA® GPU)
2x PCIe x8 (Gen 5)
(both covered by NVIDIA® GPU)

Mechanical:
Chassis
19 inch 4U rackmount chassis
Dimensions (W x H x D)
440 x 176 x 468 mm
Cooling
Active, 3x 120 mm fans
2x 80 mm fans

I/O:
Back
2x 1 GBit LAN (RJ45)
2x 10 GBit LAN (RJ45)
1x Dedicated IPMI LAN (RJ45)
2x USB 3.2 (Gen 1)
1x VGA
1x UID button with LED
Front
2x USB 3.2 (Gen 1)

Environment:
Operating Temperature
0° ~ 50° C*
Storage Temperature
-20° ~ 80° C
Relative Humidity (operation)
10 ~ 90 % (non condensing)

erFeatures:
Watchdog Timer, TPM 2.0

Operating System:
Microsoft® Windows® Server
Linux®



Published: 16. December 2025, 09:23. Subject to be change without prior notice.

INONET
A EUROTECH COMPANY

Mayflower®-II-SP5 - GPU Server

Additional illustrations



Rear view



Front view (open, empty)

InoNet Competences and Services

Consulting | *Development* | *Testing* | *Customization* | *Manufacturing* | *Certifications*

InoNet Computer GmbH
Wettersteinstraße 18
82024 Taufkirchen, Germany
www.inonet.com

www.inonet.com | Tel.: +49 89 / 666 096 - 0 | sales@inonet.com

Published: 16. December 2025, 09:23. Subject to be change without prior notice.

INONET
A EUROTECH COMPANY

Mayflower®-IISF-U200

High-quality 19“ 4U Industrial PC with front-side interfaces and Intel® Core™ Ultra CPUs

Features

- *High-Performance with Intel® Core™ Ultra CPUs*
- *Front-mounted interfaces for comfortable handling*
- *Up to 7x slots for expansion cards*
- *Robust full industrial components for 24/7 operation*
- *Drive cages in anti-vibration design, hold-downs clamps and washable air filters*

Configuration example

Further configurations on request!

Mainboard:
Industrial Mainboard (ATX)
24/7 operation, long-term available

Processor:
Intel® Core™ Ultra, 200 series
Chipset: Intel® Q870

Memory:
4x DDR5 UDIMM, max. 256 GB

Graphic:
Onboard Intel® Iris® Xe
(depending on CPU)

Drive Bays:
Internal
1x M.2 (M-key, type: 2280)
1x M.2 (M-key,
type: 2242/2260/2280/22110)
1x 3.5“, 2x 2.5“
External
2x 2.5“, 1x Slimline

Operating System:
Microsoft® Windows® 10/11, Linux®

Features:
Watchdog Timer, TPM (Intel® PTT)

Power Supply:
90 ~ 264 VAC, 500 Watt, 80 Plus
On request: Redundant power supplies for AC and DC

Expansions:
1x M.2 (B-key, type: 3042/3052)
1x M.2 (E-key, type: 2230)
1x SIM slot
2x PCIe x16 (Gen 5)
2x PCIe x4 (Gen 4)
3x PCIe x1 (Gen 4)

Mechanical:
Chassis
19 inch 4U rackmount chassis
Dimensions (W x H x D)
426 x 175 x 350 mm
Cooling
Active, 2x 120 mm fans

I/O:
Front
3x 2.5 GBit LAN (RJ45)
6x USB 3.2 (Gen 2)
1x RS-232/422/485
1x DisplayPort 1.4a
2x HDMI 2.1
1x VGA
3x Audio (Line-Out, Line-In, Mic)
Internal
1x USB 2.0 type A
1x USB 3.2 (Gen 1) type A
1x GPIO Header (8 Bit)

Environment:
Operating Temperature
0° ~ 45° C*
Storage Temperature
-40° ~ 85° C
Relative Humidity (operation)
0 ~ 95 % (non condensing)

*Ambient temperature at full expansion at full load in 24/7 operation: 0°~40°C



Published: 28. July 2026, 08:01. Subject to be change without prior notice.

INONET
A EUROTECH COMPANY

Mayflower®-IISF-U200

Additional illustrations



Rear view

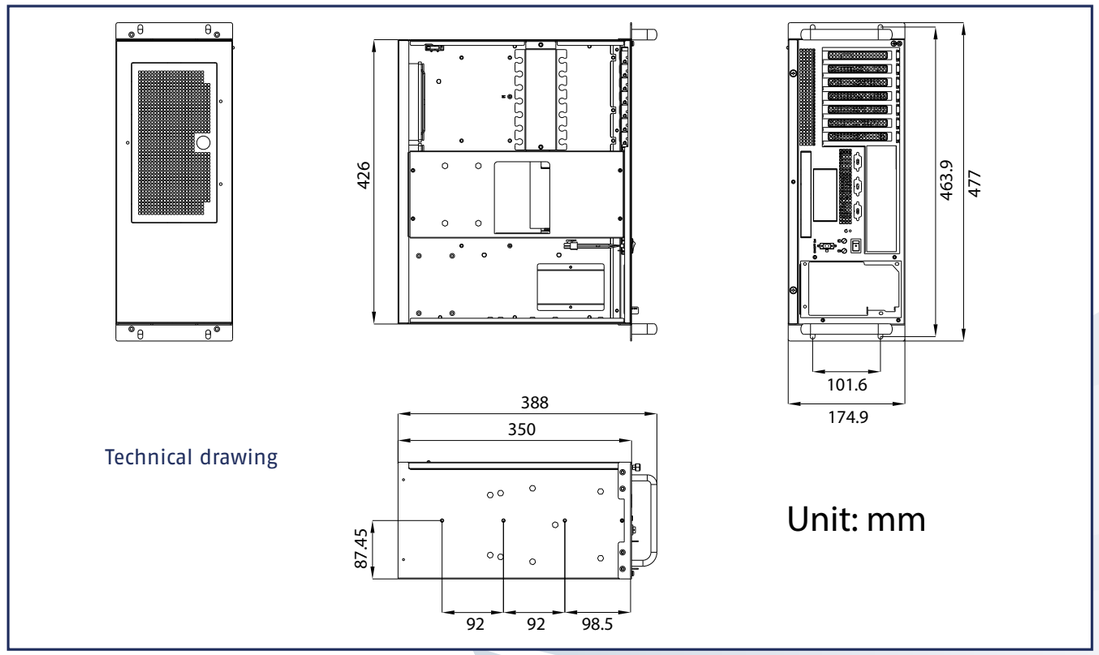

Technical drawing

Unit: mm

InoNet Competences and Services

Consulting *Development* *Testing* *Customization* *Manufacturing* *Certifications*

InoNet Computer GmbH
Wettersteinstraße 18
82024 Taufkirchen, Germany
www.inonet.com

www.inonet.com | Tel.: +49 89 / 666 096 - 0 | sales@inonet.com

Published: 28. July 2026, 08:01. Subject to be change without prior notice.

INONET
A EUROTECH COMPANY

Mayflower®-IISF-Q670E

High-quality 19“ 4U Industrial PC with front-side interfaces and Intel® Core™ i CPUs up to 14th Generation

Features

- *High-Performance with Intel® Core™ i CPUs 12th/13th/14th Generation*
- *Front-mounted interfaces for comfortable handling*
- *Up to 7x slots for expansion cards*
- *Robust full industrial components for 24/7 operation*
- *Drive cages in anti-vibration design, hold-downs clamps and washable air filters*

Configuration example

Further configurations on request!

Mainboard:
Industrial Mainboard (ATX)
24/7 operation, long-term available

Processor:
Intel® Core™ i 12th/13th/14th Generation
Chipset: Intel® Q670E

Memory:
4x DDR5 DIMM, max. 192 GB

Graphic:
Onboard Intel® UHD 730/770
(depending on CPU)

Drive Bays:
Internal
1x M.2 (M-key, type: 2280)
1x M.2 (M-key, type: 2242/2280)
1x 3.5“, 2x 2.5“
External
2x 2.5“, 1x Slimline

Operating System:
Microsoft® Windows® 10/11, Linux®

Features:
Watchdog Timer, Intel® AMT 12.0
TPM 2.0

Power Supply:
90 ~ 264 VAC, 500 Watt, 80 Plus
On request: Redundant power supplies for AC and DC

Expansions:
1x M.2 (B-key, type: 3042/3052)
1x PCIe x16 (Gen 5)
1x PCIe x16 (Gen 4), 4 Lanes
1x PCIe x4 (Gen 4)
1x PCIe x1 (Gen 3)
3x PCI

Mechanical:
Chassis
19 inch 4U rackmount chassis
Dimensions (W x H x D)
426 x 175 x 350 mm
Kühlung
Aktiv, 2x 120 mm Lüfter

I/O:
Front
2x 1 GBit LAN (RJ45)
2x USB 3.2 (Gen 2)
2x USB 3.2 (Gen 1)
1x RS-232/422/485
2x DisplayPort 1.4
2x HDMI 2.0
3x Audio (Line-Out, Line-In, Mic)
Internal
2x USB 2.0 type A
1x GPIO Header (8 Bit)

Environment:
Operating Temperature
0° ~ 45° C*
Storage Temperature
-40° ~ 85° C
Relative Humidity (operation)
0 ~ 95 % (non condensing)

*Ambient temperature at full expansion at full load in 24/7 operation: 0°~40°C



Published: 28. July 2026, 08:01. Subject to be change without prior notice.

INONET
A EUROTECH COMPANY

Mayflower®-IISF-Q670E

Additional illustrations



Rear view

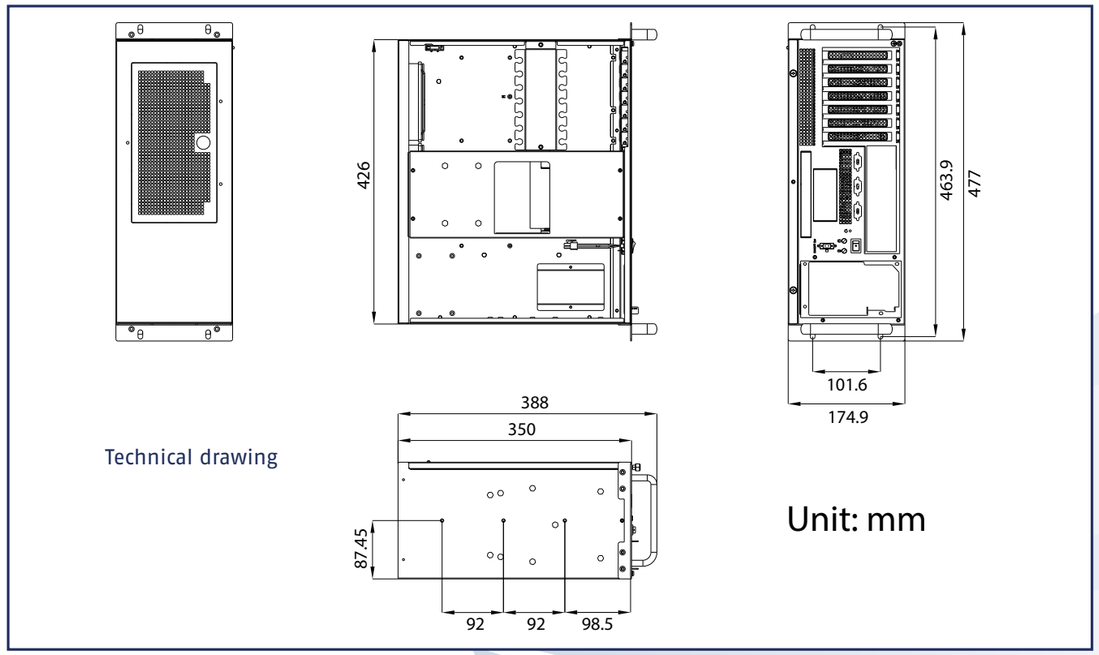

Technical drawing

Unit: mm

InoNet Competences and Services

Consulting | *Development* | *Testing* | *Customization* | *Manufacturing* | *Certifications* (ISO 9001)

InoNet Computer GmbH
Wettersteinstraße 18
82024 Taufkirchen, Germany
www.inonet.com

www.inonet.com | Tel.: +49 89 / 666 096 - 0 | sales@inonet.com

Published: 28. July 2026, 08:01. Subject to be change without prior notice.

INONET
A EUROTECH COMPANY

Mayflower®-LLM18-SP3

19“ GenAI server for AI inference and model fine-tuning with up to 3x NVIDIA® RTX 6000 Ada GPUs

Features

- *High-Performance with AMD® EPYC™ CPU*
- *Including 2x NVIDIA® RTX 6000 powerful GPUs (3x on request)*
- *2x 100 GBit LAN (QSFP28) NVIDIA® ConnectX®-6 Dx*
- *Robust full-industrial components for 24/7 operation*
- *Two additional 2.5“ shuttles*
- *Discover our free Copilot (open-source ChatBot), with which you can test various LLMs on-premise with your documents*



Configuration example

Further configurations on request!

Mainboard:
Industrial Mainboard (ATX), 24/7 operation, long-term availability

Processor:
AMD® EPYC™ 7003/7002

Memory:
8x DDR4 DIMM, max. 3200 MHz
RDIMM: max. 64 GB/DIMM
LRDIMM: max. 128 GB/DIMM

Graphic:
OnBoard AST2500, 512 MB DDR4
KI
2x NVIDIA® RTX 6000 Ada, PCIe x16 each card:
48 GB GDDR6, 4x DisplayPort 1.4, 18176 CUDA Cores
On request
1x NVIDIA® RTX 6000 Ada, PCIe x16
3x NVIDIA® RTX 6000 Ada, PCIe x16

AI Performance:
Single-Precision power: 91.1 TFLOPs
RT Core-Performance: 210.6 TFLOPs
Tensor-Performance: 1457 TFLOPs

Expansions:
7x PCIe x16 (Gen 4), full height (5 slots already used)
One slot of it optional
- PCIe x16 (Gen 4)
- PCIe x8 (Gen 4), second M.2
- no PCIe, second M.2, 2x OCuLink

Drive Bays:
Internal
1x 2.5“, 2x M.2 (one M.2 slot depending on slot configuration)
External
2x 2.5“ in shuttle, SATA/NVME

Power Supply:
90 ~ 264 VAC , 2000 Watt, 80 Plus
On request: Redundant power supply for AC and DC

Mechanical:
Chassis
19 Zoll 4HE Rackmount-Chassis
Dimensions (W x H x D)
430 x 177 x 400 mm
Cooling
Active, 2x 120 mm fans

I/O:
2x 10 GBit LAN (RJ45)
1x Dedicated IPMI LAN (RJ45)
2x 100 GBit LAN (QSFP28), NVIDIA® ConnectX®-6 Dx, PCIe x16
1x RS-232
2x USB 3.2 (Gen 1)
1x USB-C 3.2 (Gen 2)
4x DisplayPort 1.4 per graphics card
1x VGA

Environment:
Operating Temperature
0° ~ 35° C
Storage Temperature
-20° ~ 70° C
Relative Humidity
10 ~ 90 % (non condensing)
IP Protection
IP20

Operating System:
Microsoft® Windows® Server
Linux®

Published: 26. June 2024, 11:28. Subject to be change without prior notice.

INONET
A EUROTECH COMPANY

Mayflower®-LLM18-SP3

Additional illustrations



Backside



Mayflower®-LLM18-SP3 installed in a 19“ server cabinet

Mayflower®-LLMW33-SP3 with liquid cooling and remote condenser

InoNet Competences and Services

Consulting | *Development* | *Testing* | *Customization* | *Manufacturing* | *Certifications*

InoNet Computer GmbH
Wettersteinstraße 18
82024 Taufkirchen, Germany
www.inonet.com

www.inonet.com | Tel.: +49 89 / 666 096 - 0 | sales@inonet.com

Published: 26. June 2024, 11:28. Subject to be change without prior notice.

INONET
A EUROTECH COMPANY

Mayflower®-LLMW33-SP3

19“ liquid-cooled GenAI server for AI inference, model fine-tuning & training with NVIDIA® H100 NVL GPU

Features

- *High-Performance with AMD® EPYC™ CPU*
- *Including NVIDIA® H100 NVL powerful GPU (2x on request)*
- *Liquid cooling for CPU and GPU*
- *2x 100 GBit LAN (QSFP28) NVIDIA® ConnectX®-6 Dx*
- *Robust full-industrial components for 24/7 operation*
- *Discover our free Copilot (open-source ChatBot), with which you can test various LLMs on-premise with your documents*



Configuration example

Further configurations on request!

Mainboard:
Industrial Mainboard (ATX), 24/7 operation, long-term availability

Processor:
AMD® EPYC™ 7003/7002
Liquid cooled

Memory:
8x DDR4 DIMM, max. 3200 MHz
RDIMM: max. 64 GB/DIMM
LRDIMM: max. 128 GB/DIMM

Graphic:
OnBoard AST2500, 512 MB DDR4
KI
NVIDIA® H100 NVL, 2x PCIe x16
188 GB HBM3 RAM, 33792 CUDA Cores
Liquid cooled
On request
2x NVIDIA® H100 NVL, 4x PCIe x16

AI Performance:
FP64: 68 TFLOPs
FP64 Tensor Core: 134 TFLOPs
FP32: 134 TFLOPs
TF32 Tensor Core: 1979 TFLOPs
BFLOAT16 Tensor Core: 3958 TFLOPs
FP16 Tensor Core 3958 TFLOPs
FP8 Tensor Core: 7916 TFLOPs

I/O:
2x 10 GBit LAN (RJ45)
1x Dedicated IPMI LAN (RJ45)
2x 100 GBit LAN (QSFP28), NVIDIA® ConnectX®-6 Dx, PCIe x16
1x RS-232
2x USB 3.2 (Gen 1)
1x USB-C 3.2 (Gen 2)
1x VGA

Power Supply:
90 ~ 264 VAC, 2000 Watt, 80 Plus
On request: Redundant power supply for AC and DC

Expansions:
7x PCIe x16 (Gen 4), full height (4 slots already used)
One slot of it optional
- PCIe x16 (Gen 4)
- PCIe x8 (Gen 4), second M.2
- no PCIe, second M.2, 2x OCuLink

Mechanical:
Chassis
19 Zoll 4HE Rackmount-Chassis
Dimensions (W x H x D)
430 x 177 x 400 mm
Cooling
Hybrid cooling system with 2x 120 mm fans and liquid cooling for CPU and GPU cards
Remote condenser with 9x 120 mm fans for 19“ installation

Drive Bays:
Internal
2x M.2 (one M.2 slot depending on slot configuration)
External
2x 5.25“

Environment:
Operating Temperature
0° ~ 35° C
Storage Temperature
-20° ~ 70° C
Relative Humidity
10 ~ 90 % (non condensing)
IP Protection
IP20

Operating System:
Microsoft® Windows® Server
Linux®

Published: 02. August 2024, 10:44. Subject to be change without prior notice.

INONET
A EUROTECH COMPANY

Mayflower®-LLMW33-SP3

Additional illustrations

Remote condenser with 9x 120 mm fans for liquid cooling





Backside

Mayflower®-LLM18-SP3 installed in a 19“ server cabinet

Mayflower®-LLMW33-SP3 with liquid cooling and remote condenser



InoNet Competences and Services

Consulting | *Development* | *Testing* | *Customization* | *Manufacturing* | *Certifications*

InoNet Computer GmbH
Wettersteinstraße 18
82024 Taufkirchen, Germany
www.inonet.com

www.inonet.com | Tel.: +49 89 / 666 096 - 0 | sales@inonet.com

Published: 02. August 2024, 10:44. Subject to be change without prior notice.

INONET
A EUROTECH COMPANY

Mayflower®-SIDF-Q670E

19“ 2U Industrial PC – low-cost entry model with Intel® Core™ i CPUs 13th Generation and front-side interfaces

Features

- 19-inch industrial PC entry-level model
- High-Performance with Intel® Core™ i CPUs 13th Generation
- Front-mounted interfaces for comfortable handling
- Unbeatable price/performance ratio
- Drive cage in anti-vibration design
- 3x M.2 expansion
- Robust full-industrial components

Configuration example

Further configurations on request!

Mainboard:
Industrial Mainboard (ATX)
24/7 operation, long-term available

Processor:
Intel® Core™ i 13th Generation
Chipset: Intel® Q670E

Memory:
4x DDR5 DIMM, max. 128 GB

Graphic:
Onboard Intel® UHD 730/770
(depending on CPU)

Drive Bays:
Internal
4x 2.5“, 2x 3.5“

Environment:
Operating Temperature
0° ~ 50° C*
Storage Temperature
-40° ~ 85° C
Relative Humidity (operation)
0 ~ 90 % (non condensing)

Features:
Watchdog Timer
TPM 2.0 (onboard)

Power Supply:
90 ~ 264 VAC, 400 Watt
FlexATX, 80 Plus

Expansions:
1x M.2 (M-key, Type: 2242/2280)
1x M.2 (M-key, Type: 2280)
1x M.2 (B-key, Type: 3042/3052)
1x PCIe x16 (Gen 5)
1x PCIe x16 (Gen 4), 4 Lanes
1x PCIe x4 (Gen 4)
1x PCIe x1 (Gen 3)
3x PCI
7x low-profile slots

Mechanical:
Chassis
19 inch 2U rackmount chassis
Dimensions (W x H x D)
482 x 88.8 x 350 mm
Cooling
Active, 2x 80 mm fans

I/O:
Front
2x 1 GBit LAN (RJ45)
2x USB 3.2 (Gen 2)
2x USB 3.2 (Gen 1)
2x USB 2.0
1x RS-232/422/485
2x DisplayPort 1.4
2x HDMI 2.0
3x Audio (Line-Out, Line-In, Mic)
Internal
1x USB 2.0 Typ A
1x GPIO Header (8 Bit)

Operating System:
Microsoft® Windows® 10/11, Linux®

* Ambient temperature at full expansion at full load in 24/7 operation: 0° ~ 40° C



Published: 22. March 2024, 14:50. Subject to be change without prior notice.

INONET
A EUROTECH COMPANY

Mayflower®-SIDF-Q670E

Additional illustrations



Rear view

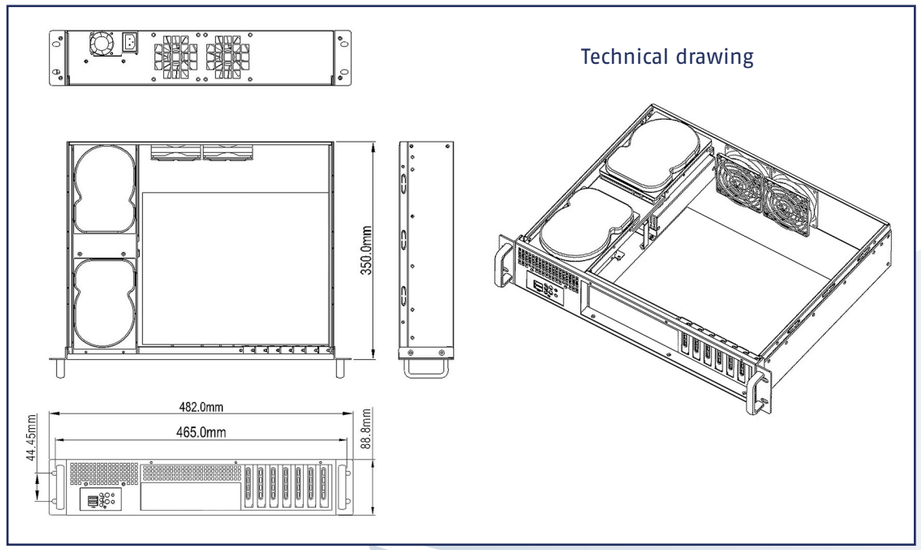

InoNet Competences and Services

Consulting | *Development* | *Testing* | *Customization* | *Manufacturing* | *Certifications*

InoNet Computer GmbH
Wettersteinstraße 18
82024 Taufkirchen, Germany
www.inonet.com

www.inonet.com | Tel.: +49 89 / 666 096 - 0 | sales@inonet.com

Published: 22. March 2024, 14:50. Subject to be change without prior notice.

INONET
A EUROTECH COMPANY

Mayflower®-SID-Q670E

19“ 2U Industrial PC – low-cost entry model with Intel® Core™ i CPUs 13th Generation

Features

- 19-inch industrial PC entry-level model
- High-Performance with Intel® Core™ i CPUs 13th Generation
- Unbeatable price/performance ratio
- Drive cage in anti-vibration design
- 4x M.2 expansion
- Robust full-industrial components

Configuration example

Further configurations on request!

Mainboard:
Industrial Mainboard (micro-ATX)
24/7 operation, long-term available

Processor:
Intel® Core™ i 12th Generation
Chipset: Intel® Q670E

Memory:
4x DDR5 DIMM, max. 128GB

Graphic:
Onboard Intel® UHD 730/770
(depending on CPU)

Drive Bays:
Internal
2x 2.5“ , 2x 3.5“
External
2x 5.25“

Environment:
Operating Temperature
0° ~ 50° C*
Storage Temperature
-40° ~ 85° C
Relative Humidity (operation)
0 ~ 90 % (non condensing)

Features:
Watchdog Timer
TPM 2.0 (onboard)

Power Supply:
90 ~ 264 VAC, 400 Watt
PS2 ATX, 80 Plus

Expansions:
2x M.2 (M-key, Type: 2242/2280)
1x M.2 (E-key, Type: 2230)
1x M.2 (B-key, Type: 2242/3042/3052)
1x PCIe x16 (Gen 5) or 2x PCIe x8
1x PCIe x4 (Gen 4)
1x PCIe x4 (Gen 3)
4x low-profile slots

Mechanical:
Chassis
19 inch 2U rackmount chassis
Dimensions (W x H x D)
428 x 88 x 425 mm
Cooling
Active, 2x 60 mm fans

I/O:
Back
2x 1 GBit LAN (RJ45)
4x USB 3.2 (Gen 2)
1x RS-232/422/485
1x DisplayPort 1.4
1x HDMI 2.0
1x VGA
3x Audio (Line-Out, Line-In, Mic)
Front
2x USB 3.2 (Gen 1)
Internal
1x USB 3.2 (Gen 1) type A
1x GPIO Header (8 Bit)

Operating System:
Microsoft® Windows® 10/11, Linux®

*Ambient temperature at full expansion at full load in 24/7 operation: 0°~40°C



Published: 22. March 2024, 13:46. Subject to be change without prior notice.

INONET
A EUROTECH COMPANY

Mayflower®-SID-Q670E

Additional illustrations



Rear view



Front view (open)

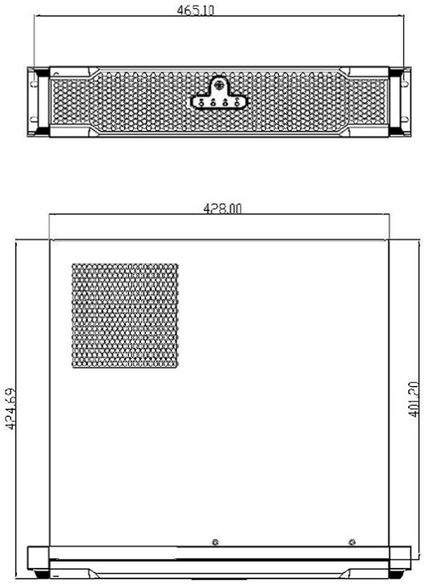

Technical drawing

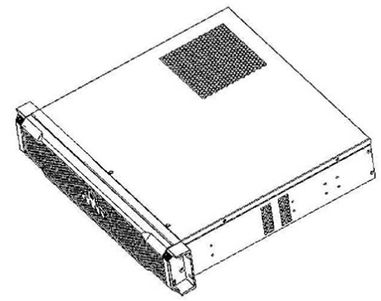

Unit: mm

InoNet Competences and Services

Consulting | *Development* | *Testing* | *Customization* | *Manufacturing* | *Certifications*

InoNet Computer GmbH
Wettersteinstraße 18
82024 Taufkirchen, Germany
www.inonet.com

www.inonet.com | Tel.: +49 89 / 666 096 - 0 | sales@inonet.com

Published: 22. March 2024, 13:46. Subject to be change without prior notice.

INONET
A EUROTECH COMPANY

Mayflower®-ID-AM5 - GPU Server

19“ 2U GPU Server with NVIDIA® RTX PRO™ 2000/4000 Blackwell GPU and AMD® Ryzen™/EPYC™ Processor

Features

- *High-Performance with AMD® Ryzen™/EPYC™ CPU*
- *Powerful NVIDIA® RTX PRO™ 2000/4000 Blackwell GPU*
- *6x 2.5“ hot-swap drive bays*
- *Depth only 450 mm*
- *Robust full-industrial components for 24/7 operation*

Configuration example

Further configurations on request!

Mainboard:
Industrial Mainboard (micro-ATX)
24/7 operation, long-term available

Processor:
AMD® EPYC™ 4005/4004 or
AMD® Ryzen™ 7000/8000/9000
Socket: AM5

Memory:
2x DDR5 DIMM, max. 192 GB

Graphic:
Onboard ASPEED AST2600, 64 MB

GPU:
1x NVIDIA® RTX PRO™ 2000 Backwell
PCIe x8, 16 GB GDDR7 with ECC
4x Mini-DisplayPort 2.1b
4352 CUDA Cores
or
1x NVIDIA® RTX PRO™ 4000 Backwell
PCIe x8, 24 GB GDDR7 with ECC
4x Mini-DisplayPort 2.1b
8960 CUDA Cores

Drive Bays:
Internal
1x M.2 (M-key, type: 2280/2242)
External (front)
4x 2.5“ hot-swap
External (back)
2x 2.5“ hot-swap (optional)

Power Supply:
90 ~ 264 VAC, FlexATX, 80 Plus
2x 800 Watt redundant

Expansions:
1x PCIe x16 (Gen 4)
(used by NVIDIA® RTX GPU)

Mechanical:
Chassis
19 inch 2U rackmount chassis
Dimensions (W x H x D)
438 x 87 x 450 mm
Cooling
Active, 4x 80 mm fans

I/O:
Back
2x 1 GBit LAN (RJ45)
2x 10 GBit LAN (RJ45)
1x Dedicated IPMI LAN (RJ45)
4x USB 3.2 (Gen 1)
1x RS-232
4x Mini-DisplayPort 2.1b
1x DisplayPort
1x HDMI
1x VGA
Front
1x USB 3.2 (Gen 1)

Environment:
Operating Temperature
0° ~ 50° C
Storage Temperature
-20° ~ 80° C
Relative Humidity (operation)
10 ~ 90 % (non condensing)

Features:
Watchdog Timer
TPM 2.0

Operating System:
Microsoft® Windows® Server 2022
Microsoft® Windows® 10/11, Linux®



Published: 15. December 2025, 13:07. Subject to be change without prior notice.

INONET
A EUROTECH COMPANY

Mayflower®-ID-AM5 - GPU Server

Additional illustrations



Rear view
(version with 7x half-size slots)



Front view

InoNet Competences and Services

Consulting | *Development* | *Testing* | *Customization* | *Manufacturing* | *Certifications* (ISO 9001)

InoNet Computer GmbH
Wettersteinstraße 18
82024 Taufkirchen, Germany
www.inonet.com

www.inonet.com | Tel.: +49 89 / 666 096 - 0 | sales@inonet.com

Published: 15. December 2025, 13:07. Subject to be change without prior notice.

INONET
A EUROTECH COMPANY

Mayflower®-ID-U200

Modular 19“ 2U system incl. alarm module with Intel® Core™ Ultra CPUs and 7 expansion slots

Features

- *High-Performance with Intel® Core™ Ultra CPUs*
- *7x low-profile expansion slots*
- *On request: 2x full-size expansion slots (various riser cards)*
- *Robust full-industrial components for 24/7 operation*
- *1x 5.25“ and 3x 3.5“ vibration resistant drive slots*
- *Integrated alarm module for signaling error conditions*

Configuration example

Further configurations on request!

Mainboard:
Industrial Mainboard (ATX)
24/7 operation, long-term available

Processor:
Intel® Core™ Ultra, 200 series
Chipset: Intel® Q870

Memory:
4x DDR5 UDIMM, max. 256 GB

Graphic:
Onboard Intel® Iris® Xe
(depending on CPU)

Drive Bays:
Internal
1x M.2 (M-key, type: 2280)
1x M.2 (M-key,
type: 2242/2260/2280/22110)
2x 3.5“
External
1x 5.25“, 1x 3.5“

Environment:
Operating Temperature
0° ~ 45° C*
Storage Temperature
-40° ~ 85° C
Relative Humidity (operation)
0 ~ 95 % (non condensing)

Features:
Watchdog Timer, TPM (Intel® PTT)

Power Supply:
90 ~ 264 VAC, 400 Watt
FlexATX, 80 Plus

Expansions:
1x M.2 (B-key, type: 3042/3052)
1x M.2 (E-key, type: 2230)
1x SIM slot
2x PCIe x16 (Gen 5)
2x PCIe x4 (Gen 4)
3x PCIe x1 (Gen 4)
7x low-profile slots
On request: 2x full-size expansion slots (various riser cards)

Mechanical:
Chassis
19 inch 2U rackmount chassis
Dimensions (W x H x D)
482 x 88 x 481 mm
Cooling
Active, 2x 80 mm fans

I/O:
Back
3x 2.5 GBit LAN (RJ45)
6x USB 3.2 (Gen 2)
1x RS-232/422/485
1x DisplayPort 1.4a
2x HDMI 2.1
1x VGA
3x Audio (Line-Out, Line-In, Mic)
Front
2x USB 2.0
Internal
1x USB 2.0 type A
1x USB 3.2 (Gen 1) type A
1x GPIO Header (8 Bit)

Operating System:
Microsoft® Windows® 10/11, Linux®

*Ambient temperature at full expansion at full load in 24/7 operation: 0°~40°C



Published: 27. July 2026, 10:38. Subject to be change without prior notice.

INONET
A EUROTECH COMPANY

Mayflower®-ID-U200

Additional illustrations



Rear view (version with full-size slots)



Front view (open)

Technical drawing

Unit: mm

InoNet Competences and Services

Consulting | *Development* | *Testing* | *Customization* | *Manufacturing* | *Certifications*

InoNet Computer GmbH
Wettersteinstraße 18
82024 Taufkirchen, Germany
www.inonet.com

www.inonet.com | Tel.: +49 89 / 666 096 - 0 | sales@inonet.com

Published: 27. July 2026, 10:38. Subject to be change without prior notice.

INONET
A EUROTECH COMPANY

Mayflower®-ID-Q670E

Modular 19“ 2U system incl. alarm module with Intel® Core™ i CPUs up to 14th generation

Features

- *High-Performance with Intel® Core™ i CPUs 12th/13th/14th Generation*
- *7x low-profile expansion slots*
- *On request: 2x full-size expansion slots (various riser cards)*
- *Robust full-industrial components for 24/7 operation*
- *1x 5.25“ and 3x 3.5“ vibration resistant drive slots*
- *Integrated alarm module for signaling error conditions*

Configuration example

Further configurations on request!

Mainboard:
Industrial Mainboard (ATX)
24/7 operation, long-term available

Processor:
Intel® Core™ i 12th/13th/14th Generation
Chipset: Intel® Q670E

Memory:
4x DDR5 DIMM, max. 192 GB

Graphic:
Onboard Intel® UHD 730/770
(depending on CPU)

Drive Bays:
Internal
1x M.2 (M-key, type: 2280)
1x M.2 (M-key, type: 2242/2280)
2x 3.5“
External
1x 5.25“, 1x 3.5“

Environment:
Operating Temperature
0° ~ 45° C*
Storage Temperature
-40° ~ 85° C
Relative Humidity (operation)
0 ~ 95 % (non condensing)

Features:
Watchdog Timer, Intel® AMT 12.0
TPM 2.0

Power Supply:
90 ~ 264 VAC, 400 Watt
FlexATX, 80 Plus

Expansions:
1x M.2 (B-key, type: 3042/3052)
1x PCIe x16 (Gen 5)
1x PCIe x16 (Gen 4), 4 Lanes
1x PCIe x4 (Gen 4)
1x PCIe x1 (Gen 3)
3x PCI
7x low-profile slots
On request: 2x full-size expansion slots (various riser cards)

Mechanical:
Chassis
19 inch 2U rackmount chassis
Dimensions (W x H x D)
482 x 88 x 481 mm
Cooling
Active, 2x 80 mm fans

I/O:
Back
2x 1 GBit LAN (RJ45)
2x USB 3.2 (Gen 2)
2x USB 3.2 (Gen 1)
1x RS-232/422/485
2x DisplayPort 1.4
2x HDMI 2.0
3x Audio (Line-Out, Line-In, Mic)
Front
2x USB 2.0
Internal
2x USB 2.0 type A
1x GPIO Header (8 Bit)

Operating System:
Microsoft® Windows® 10/11, Linux®

*Ambient temperature at full expansion at full load in 24/7 operation: 0°~40°C



Published: 27. July 2026, 10:38. Subject to be change without prior notice.

INONET
A EUROTECH COMPANY

Mayflower®-ID-Q670E

Additional illustrations



Rear view (version with full-size slots)



Front view (open)

Technical drawing

Unit: mm

InoNet Competences and Services

Consulting | *Development* | *Testing* | *Customization* | *Manufacturing* | *Certifications* (ISO 9001)

InoNet Computer GmbH
Wettersteinstraße 18
82024 Taufkirchen, Germany
www.inonet.com

www.inonet.com | Tel.: +49 89 / 666 096 - 0 | sales@inonet.com

Published: 27. July 2026, 10:38. Subject to be change without prior notice.

INONET
A EUROTECH COMPANY

Mayflower®-IDF-U200

Powerful 19“ 2U Industrial PC with front-side interfaces and Intel® Core™ Ultra CPUs

Features

- *High-Performance with Intel® Core™ Ultra CPUs*
- *7x low-profile expansion slots*
- *4x M.2 expansion*
- *Front-mounted interfaces for comfortable handling*
- *Robust full-industrial components for 24/7 operation*
- *2x 3.2“ and 4x 2.5“ vibration resistant drive slots*

Configuration example

Further configurations on request!

Mainboard:
Industrial Mainboard (ATX)
24/7 operation, long-term available

Processor:
Intel® Core™ Ultra, 200 series
Chipset: Intel® Q870

Memory:
4x DDR5 UDIMM, max. 256 GB

Graphic:
Onboard Intel® Iris® Xe
(depending on CPU)

Drive Bays:
Internal
1x M.2 (M-key, type: 2280)
1x M.2 (M-key,
type: 2242/2260/2280/22110)
4x 2.5“, 2x 3.5“

Environment:
Operating Temperature
0° ~ 45° C*
Storage Temperature
-40° ~ 85° C
Relative Humidity (operation)
0 ~ 90 % (non condensing)

Power Supply:
90 ~ 264 VAC, 400 Watt
FlexATX, 80 Plus

Expansions:
1x M.2 (B-key, type: 3042/3052)
1x M.2 (E-key, type: 2230)
1x SIM slot
2x PCIe x16 (Gen 5)
2x PCIe x4 (Gen 4)
3x PCIe x1 (Gen 4)
7x low-profile slots

Mechanical:
Chassis
19 inch 2U rackmount chassis
Dimensions (W x H x D)
482 x 88.8 x 350 mm
Cooling
Active, 2x 80 mm fans

I/O:
Front
3x 2.5 GBit LAN (RJ45)
6x USB 3.2 (Gen 2)
2x USB 2.0
1x RS-232/422/485
1x DisplayPort 1.4a
2x HDMI 2.1
1x VGA
3x Audio (Line-Out, Line-In, Mic)
Internal
1x USB 2.0 type A
1x USB 3.2 (Gen 1) type A
1x GPIO Header (8 Bit)

Features:
Watchdog Timer, TPM (Intel® PTT)

Operating System:
Microsoft® Windows® 10/11, Linux®

* Ambient temperature at full expansion at full load in 24/7 operation: 0° ~ 40° C



Published: 28. July 2026, 08:00. Subject to be change without prior notice.

INONET
A EUROTECH COMPANY

Mayflower®-IDF-U200

Additional illustrations



Rear view

Technical drawing

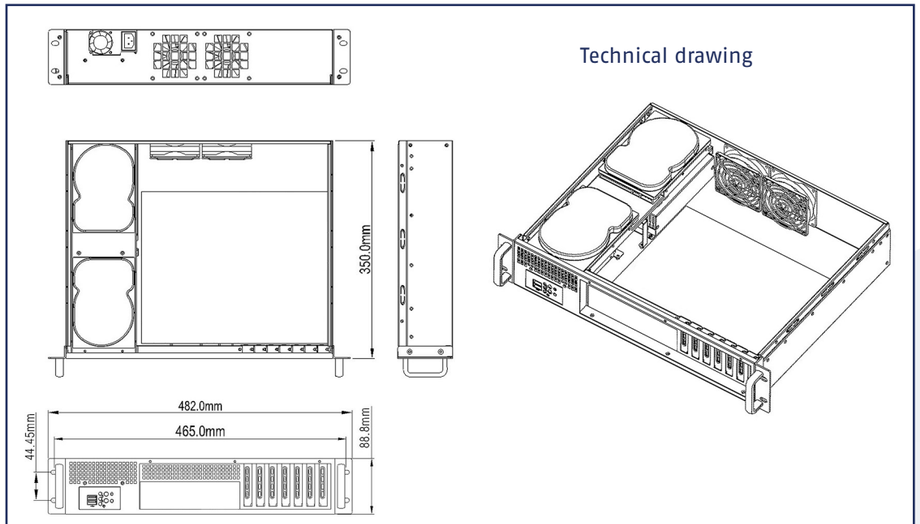

InoNet Competences and Services

Consulting | *Development* | *Testing* | *Customization* | *Manufacturing* | *Certifications*

InoNet Computer GmbH
Wettersteinstraße 18
82024 Taufkirchen, Germany
www.inonet.com

www.inonet.com | Tel.: +49 89 / 666 096 - 0 | sales@inonet.com

Published: 28. July 2026, 08:00. Subject to be change without prior notice.

INONET
A EUROTECH COMPANY

Mayflower®-IDF-Q670E

Powerful 19“ 2U Industrial PC with front-side interfaces and Intel® Core™ i CPUs up to 14th Generation

Features

- *High-Performance with Intel® Core™ i CPUs 12th/13th/14th Generation*
- *7x low-profile expansion slots*
- *3x M.2 expansion*
- *Front-mounted interfaces for comfortable handling*
- *Robust full-industrial components for 24/7 operation*
- *2x 3.2“ and 4x 2.5“ vibration resistant drive slots*

Configuration example

Further configurations on request!

Mainboard:
Industrial Mainboard (ATX)
24/7 operation, long-term available

Processor:
Intel® Core™ i 12th/13th/14th Generation
Chipset: Intel® Q670E

Memory:
4x DDR5 DIMM, max. 192 GB

Graphic:
Onboard Intel® UHD 730/770
(depending on CPU)

Drive Bays:
Internal
1x M.2 (M-key, type: 2280)
1x M.2 (M-key, type: 2242/2280)
4x 2.5“, 2x 3.5“

Environment:
Operating Temperature
0° ~ 45° C*
Storage Temperature
-40° ~ 85° C
Relative Humidity (operation)
0 ~ 90 % (non condensing)

Power Supply:
90 ~ 264 VAC, 400 Watt
FlexATX, 80 Plus

Expansions:
1x M.2 (B-key, type: 3042/3052)
1x PCIe x16 (Gen 5)
1x PCIe x16 (Gen 4), 4 Lanes
1x PCIe x4 (Gen 4)
1x PCIe x1 (Gen 3)
3x PCI
7x low-profile slots

Mechanical:
Chassis
19 inch 2U rackmount chassis
Dimensions (W x H x D)
482 x 88.8 x 350 mm
Cooling
Active, 2x 80 mm fans

I/O:
Front
2x 1 GBit LAN (RJ45)
2x USB 3.2 (Gen 2)
2x USB 3.2 (Gen 1)
2x USB 2.0
1x RS-232/422/485
2x DisplayPort 1.4
2x HDMI 2.0
3x Audio (Line-Out, Line-In, Mic)
Internal
1x USB 2.0 type A
1x GPIO Header (8 Bit)

Features:
Watchdog Timer, Intel® AMT 12.0
TPM 2.0

Operating System:
Microsoft® Windows® 10/11, Linux®



* Ambient temperature at full expansion at full load in 24/7 operation: 0° ~ 40° C

Published: 28. July 2026, 08:00. Subject to be change without prior notice.

INONET
A EUROTECH COMPANY

Mayflower®-IDF-Q670E

Additional illustrations



Rear view

Technical drawing

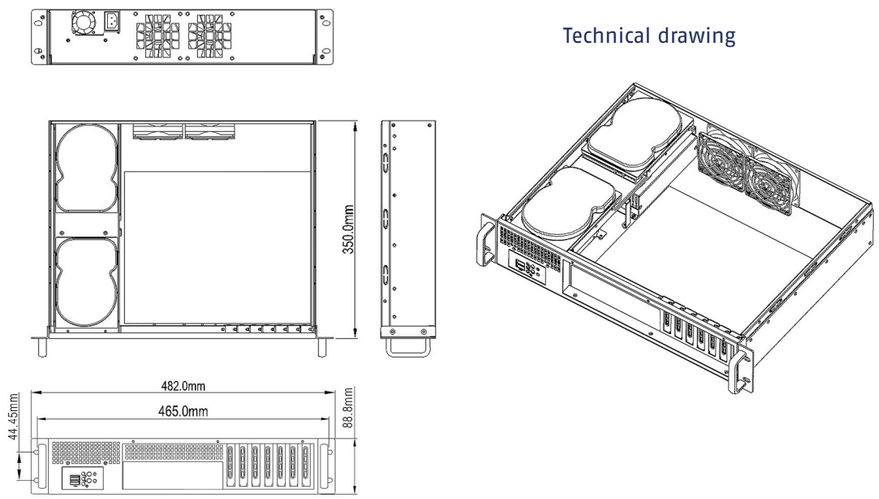

InoNet Competences and Services

Consulting | *Development* | *Testing* | *Customization* | *Manufacturing* | *Certifications*

InoNet Computer GmbH
Wettersteinstraße 18
82024 Taufkirchen, Germany
www.inonet.com

www.inonet.com | Tel.: +49 89 / 666 096 - 0 | sales@inonet.com

Published: 28. July 2026, 08:00. Subject to be change without prior notice.

INONET
A EUROTECH COMPANY

Mayflower®-IDS-Q670E

Short 19“ 2U system with 4 PCIe and 4 M.2 slots for Intel® Core™ i CPUs up to 14th Generation

Features

- *High-Performance with Intel® Core™ i CPUs 12th/13th/14th Generation*
- *4x PCIe slots for expansion cards*
- *Depth only 385 mm*
- *4x M.2 expansion*
- *Robust full industrial components for 24/7 operation*
- *Drive cages in anti-vibration design*

Configuration example

Further configurations on request!

Mainboard:
Industrial Mainboard (micro-ATX)
24/7 operation, long-term available

Processor:
Intel® Core™ i 12th/13th/14th Generation
Chipset: Intel® Q670E

Memory:
4x DDR5 UDIMM, max. 128 GB

Graphic:
Onboard Intel® UHD 730/770
(depending on CPU)

Drive Bays:
Internal
2x 2.5“, 2x 3.5“
External
2x 5.25“

Environment:
Operating Temperature
0° ~ 45° C*
Storage Temperature
-40° ~ 85° C
Relative Humidity (operation)
0 ~ 90 % (non condensing)

Features:
Watchdog Timer
TPM 2.0 (onboard)

Power Supply:
90 ~ 264 VAC, 400 Watt
PS2 ATX, 80 Plus

Expansions:
2x M.2 (M-key, Type: 2242/2280)
1x M.2 (E-key, Type: 2230)
1x M.2 (B-key, Type: 2242/3042/3052)
1x PCIe x16 (Gen 5), 16 lanes*
*8 lanes if both PCIe x16 are used
1x PCIe x16 (Gen 5), 8 lanes
1x PCIe x4 (Gen 4), 4 lanes
1x PCIe x4 (Gen 3), 2 lanes
Low-Profile

Mechanical:
Chassis
19 inch 2U rackmount chassis
Lockable front door
Dimensions (W x H x D)
428 x 88 x 385 mm
Cooling
Active, 2x 60 mm fans
Air filter changeable from the front

I/O:
Back
2x 1 GBit LAN (RJ45)
4x USB 3.2 (Gen 2)
1x RS-232/422/485
1x RS-232 optional
1x DisplayPort 1.4
1x HDMI 2.0
1x VGA
3x Audio (Line-Out, Line-In, Mic)
Front
2x USB 3.2 (Gen 1)
Internal
1x USB 3.2 (Gen 1) type A
1x GPIO Header (8 Bit)

Operating System:
Microsoft® Windows® 10/11, Linux®



Published: 03. February 2025, 16:23. Subject to be change without prior notice.

INONET
A EUROTECH COMPANY

Mayflower®-IDS-Q670E

Additional illustrations



Rear view



Front view (open)

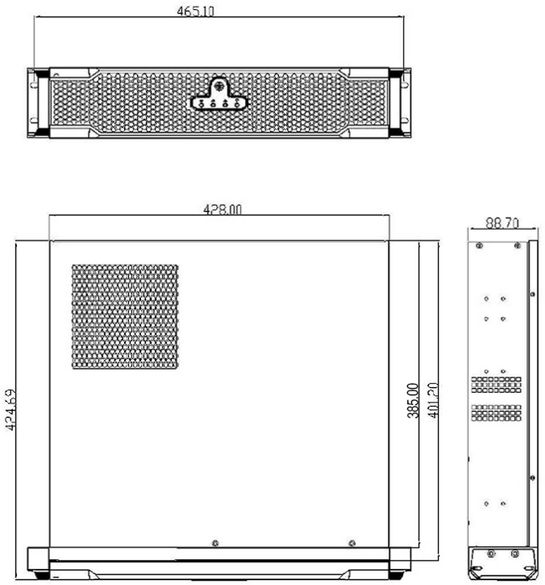

Technical drawing

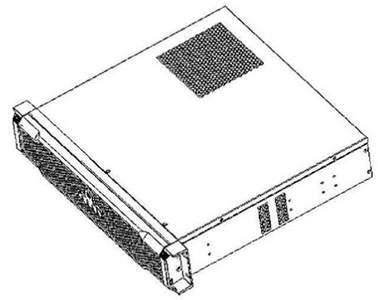

Unit: mm

InoNet Competences and Services

Consulting | *Development* | *Testing* | *Customization* | *Manufacturing* | *Certifications*

ISO 9001

InoNet Computer GmbH
Wettersteinstraße 18
82024 Taufkirchen, Germany
www.inonet.com

www.inonet.com | Tel.: +49 89 / 666 096 - 0 | sales@inonet.com

Published: 03. February 2025, 16:23. Subject to be change without prior notice.

INONET
A EUROTECH COMPANY

Mayflower®-I-H420E

Flexible 19“ 1U system incl. alarm module. Powerful due to Intel® Core™ i CPUs of the 10th generation.

Features

- *High-Performance with Intel® Core™ i CPUs 10th Generation*
- *1x full-size expansion slot*
- *Robust full-industrial components for 24/7 operation*
- *Up to 3 drive slots*
- *Air filter replaceable from the front*
- *Integrated alarm module for signaling error conditions*

Configuration example

Further configurations on request!

Mainboard:
Industrial Mainboard (ATX)
24/7 operation, long-term available

Processor:
Intel® Core™ i 10th Generation
Chipset: Intel® H420E

Memory:
2x DDR4 DIMM, max. 64 GB

Graphic:
Intel® UHD 630 (integrated in CPU)

Drive Bays:
Internal
1x M.2 (M-key, type: 2280)
1x 3.5“ or 2x 2.5“
External
1x 3.5“, 1x Slim ODD

Operating System:
Microsoft® Windows® 10/11, Linux®

Features:
Watchdog Timer
TPM 2.0 module (optional)

Power Supply:
90 ~ 264 VAC, 300 Watt
FlexATX, 80 Plus

Expansions:
1x PCI, full size
On request: 1x PCIe x16 (Gen 3)

Mechanical:
Chassis
19 inch 1U rackmount chassis
Dimensions (W x H x D)
426 x 44 x 497 mm
Cooling
Active, 2x 40 mm fans

I/O:
Back
2x 1 GBit LAN (RJ45)
6x USB 3.2 (Gen 1)
2x RS-232
1x RS-232/422/485 (optional)
1x DVI-D
1x VGA
2x Audio (Line-out, Mic)
Front
2x USB 2.0
Internal
2x USB 2.0 type A
1x GPIO Header (8 Bit)

Environment:
Operating Temperature
0° ~ 45° C*
Storage Temperature
-20° ~ 60° C
Relative Humidity (operation)
10 ~ 85 % (non condensing)

*Ambient temperature at full expansion at full load in 24/7 operation: 0°~40°C



Published: 15. January 2025, 14:49. Subject to be change without prior notice.

INONET
A EUROTECH COMPANY

Mayflower®-I-H420E

Additional illustrations



Rear view



Front view (open)

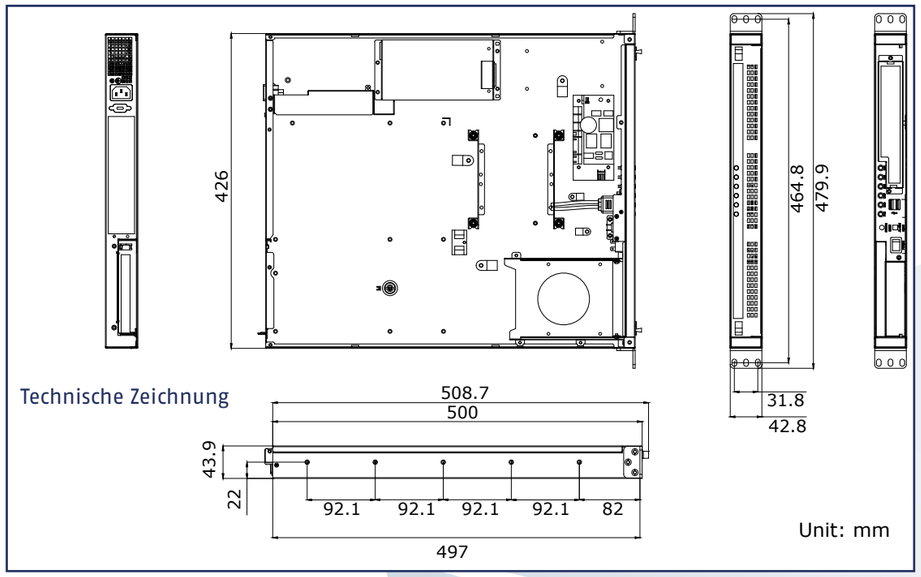

InoNet Competences and Services

Consulting | *Development* | *Testing* | *Customization* | *Manufacturing* | *Certifications*

InoNet Computer GmbH
Wettersteinstraße 18
82024 Taufkirchen, Germany
www.inonet.com

www.inonet.com | Tel.: +49 89 / 666 096 - 0 | sales@inonet.com

Published: 15. January 2025, 14:49. Subject to be change without prior notice.



InoNet Embedded Computing Solutions

Embedded PCs in industrial applications are facing the most challenging requirements in terms of space constraints, environmental conditions and computing power. Systems are exposed to shock and vibration, dust, extreme temperature ranges or need to operate in mobile applications. In addition, automation tasks are getting more and more complex, which results in higher requirements on computing power, memory and expansion slots. InoNet Embedded PCs are at the forefront of industrial grade ruggedized, high performance systems for demanding applications – powering production lines, collecting and analyzing data in the field, or enabling testing and validation from classic applications to autonomous driving in the in-vehicle development.



High-End Embedded PCs

The Concepion® series includes compact high-quality fanless and active cooled Embedded PCs with the latest technologies for computing performance and connectivity. Due to rugged components, they are suitable for 24/7 use in industrial environments. In addition, various optionally executable I/O interfaces, expansion slots, drive shuttles and offer maximum flexibility with regard to the requirements of the target application. For more complex automation tasks and AI applications, InoNet has powerful, actively cooled high-performance computers in its portfolio.



High-Performance and Wallmount Embedded PCs

These High-Performance Computers are suitable for logging, storing and analyzing masses of camera and sensor data and support AI applications. They offer enormous CPU/GPU-Performance, storage capacity and expansion card options.

No suitable system?
InoNet is the leading supplier of individually developed industrial PCs. We offer flexible OEM services, individual interface configuration, chassis design or even customer-specific cooling concepts. Challenge us!

Overview Embedded IPC

Compact, fanless box PCs and active cooled high-performance computers

Passive cooled

Concepion®-bX-v3-Q670E	Intel® Core™ i	Wallmount	4x Bay / 3x M.2	2x PCIe
Concepion®-jX-v4.1-U100	Intel® Core™ Ultra	Wallmount	3x M.2	
Concepion®-jX-v4.2-U100	Intel® Core™ Ultra	Wallmount	2x Bay / 3x M.2	1x PCIe
Eurotech ReliaCOR 31-11	NVIDIA® Jetson	Wallmount	3x M.2	
Eurotech ReliaCOR 33-11	NVIDIA® Jetson	Wallmount	3x M.2	
Eurotech ReliaCOR 40-13	Intel® Core™ i	Wallmount	2x Bay / 2x M.2	

Active cooled

Concepion®-LLM-v3-L07-R680E	Intel® Core™ i	Wallmount	2x Bay / 3x M.2	
Concepion®-tXf-v3-L-R680E	Intel® Core™ i	Wallmount	2x Bay / 3x M.2	2x PCIe
Eurotech ReliaCOR 54-13	Intel® Core™ i	Wallmount	2x Bay / 1x M.2	3x PCIe
Mayflower®-M7-Q670E	Intel® Core™ i	Wallmount	5x Bay / 1x M.2	5x PCIe / 2x PCI
Mayflower®-M7S - 10. Gen.	Intel® Core™ i	Wallmount	5x Bay / 3x M.2	5x PCIe / 2x PCI
Mayflower®-Q12W-SP5	Intel® Core™ i		2x Bay / 2x M.2	12x PCIe
Mayflower®-SM7-Q670E	Intel® Core™ i	Wallmount	5x Bay / 1x M.2	5x PCIe / 2x PCI

INONET
A EUROTECH COMPANY

Concepion®-bX-v3-Q670E

Compact and fanless high performance embedded system with 12th/13th/14th generation Intel® Core™ i CPUs

Features

- *High-Performance with Intel® Core™ i CPUs 12th/13th/14th Generation*
- *High flexibility due to multiple interfaces*
- *Optional Wi-Fi/Bluetooth/ GNSS/LTE (5G on request)*
- *Expandable by two PCIe slots*
- *Two 2.5“ shuttles with hot-swap function*
- *Passive cooling*
- *Extra robust*



Configuration example

Further configurations on request!

Mainboard:
Industrial Mainboard (mini-ITX), 24/7 operation, long-term available

Processor:
Intel® Core™ i 12th/13th/14th Generation
Chipset: Intel® Q670E
Intel® Turbo-Boost: Depends on the selected configuration

Graphic:
Onboard Intel® UHD 730/770 (depends on CPU)

Memory:
2x DDR5 SO-DIMM, max. 64GB

Drive Bays:
Internal
2x M.2 (M-key, type: 2242/2260/2280)
2x 2.5“
External
2x 2.5“ SATA-III SSD in shuttle

I/O:
1x 1 GBit LAN (RJ45)
1x 2.5 GBit LAN (RJ45), vPro support
2x 1 GBit LAN (RJ45) (optional)
3x USB 3.2 (2x Gen 2, 1x Gen 1)
1x USB-C 3.2 (Gen 2)
6x USB 2.0
1x RS-232/422/485
2x RS-232 (optional)
3x DisplayPort 1.4
1x HDMI 2.0
2x Audio (Line-In, Line-Out)
2x PS/2 (Mouse and Keyboard)
Internal
1x USB-A 3.2 (Gen 2)
1x GPIO Header (8 Bit), 3.3 Volt

Features:
Watchdog Timer, iAMT
SPI TPM Header, Onboard PTT (dTPM)

Operating System:
Microsoft® Windows® 10/11, Linux®

Power Supply:
11 ~ 32 VDC, 120 Watt
XLR connector (Neutrik) four-pin
XLR connector incl.
Optional
ext. power supply 100 ~ 240 VAC
XLR angled plug 90°

Expansions:
2x PCIe x8 (Gen 4) via riser card
(The maximum power loss must not exceed a specified value. Please contact us for further information).
1x M.2 (E-key, type: 2230)

Communication:
Wi-Fi/Bluetooth (optional)
Intel® M.2 Module, 802.11ax Dual Band 2x2 160 MHz, Bluetooth® 5.1
GNSS/LTE (optional)
Support for GPS, GLONASS, BeiDou, Galileo, QZSS, Micro SIM slot for 3G/4G (on request: 5G with additional antennas)

Mechanical:
Chassis
Robust 1 mm galvanized sheet steel with powder coating
Dimensions (W x H x D)
250 x 145.5 x 262 mm
Cooling
Passive
Mounting
Wallmount, Desktop

Environment:
Operating Temperature
-10° ~ 55° C
Shock
5 g / 2 ms
Vibration (operation)
0.6 g (10 - 200 Hz)
Storage Temperature
-20° ~ 70° C
Relative Humidity (operation)
10 ~ 90 % (non condensing)
IP Protection
IP20

Published: 11. December 2024, 14:36. Subject to be change without prior notice.

INONET
A EUROTECH COMPANY

Concepion®-bX-v3-Q670E

Additional illustrations



Optional with Wi-Fi/Bluetooth

Technical drawing

Unit: mm

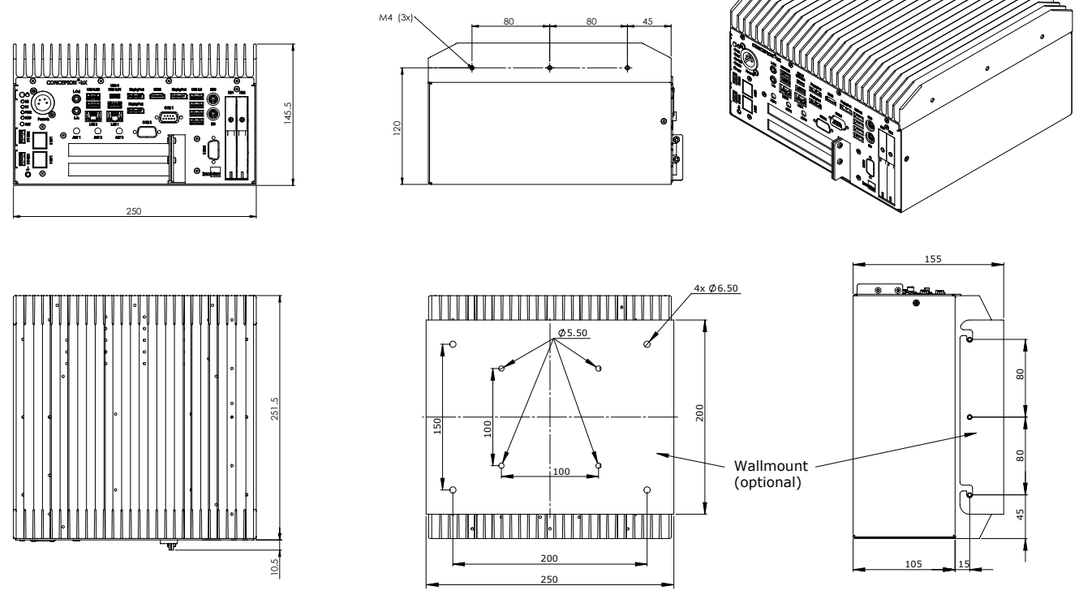

InoNet Competences and Services

Consulting | *Development* | *Testing* | *Customization* | *Manufacturing* | *Certifications*

InoNet Computer GmbH
Wettersteinstraße 18
82024 Taufkirchen, Germany
www.inonet.com

www.inonet.com | Tel.: +49 89 / 666 096 - 0 | sales@inonet.com

Published: 11. December 2024, 14:36. Subject to be change without prior notice.

INONET
A EUROTECH COMPANY

Concepion®-jX-v4.1-U100

Compact and fanless high performance embedded PC with Intel® Core™ Ultra CPUs

Features

- *High-Performance with Intel® Core™ Ultra CPUs*
- *Passive cooling for flexible and quiet use*
- *Ultra-compact design*
- *USB-C & 3x 2.5 GBit LAN for high-speed data transfer*
- *Optional Wi-Fi/Bluetooth, GNSS/LTE*

Configuration example

Further configurations on request!

Mainboard:
Industrial Mainboard (mini-ITX), 24/7 operation, long-term available

Processor:
Intel® Core™ Ultra, 100 series

Graphic:
Onboard Intel® Iris® Xe (depends on CPU)

Memory:
2x DDR5 SO-DIMM, max. 64 GB

Drive Bays:
1x M.2 (M-key, type: 2280)

I/O:
3x 2.5 GBit LAN (RJ45)
4x USB 3.2
2x USB-C 3.2
2x USB 2.0
2x RS-232/422/485
1x DisplayPort 1.4a, DP++
1x HDMI 2.0a
3x Audio (Line-In, Line-Out, Mic)
1x Digital I/O (optional)

Features:
Watchdog Timer, iAMT 18.0, fTPM

Power Supply:
12 ~ 24 VDC
Phoenix socket
Optional
ext. power supply 100 ~ 264 VAC
ext. DIN rail power supply 100 ~ 240 VAC, 120 Watt

Expansions:
1x M.2 (E-key, type: 2230)
1x M.2 (B-key, type: 3052)
1x SIM slot

Communication:
Wi-Fi/Bluetooth (optional)
Intel® M.2 Module, 802.11ax Dual Band, Bluetooth® 5.1
GNSS/LTE (optional)
Support for GPS, GLONASS, BeiDou, Galileo, QZSS
SIM slot for 3G/4G/G5

Mechanical:
Chassis
1 mm sheet steel, powder coated
Heat sink extruded aluminum profile
Dimensions (W x H x D)
200 x 103 x 200 mm
Cooling
Passive

Environment:
Operating Temperature
0° ~ 50° C
Storage Temperature
-20° ~ 70° C
Relative Humidity (operation)
10 ~ 90 % (non condensing)
IP Protection
IP20

Operating System:
Microsoft® Windows® 10/11, Linux®



Published: 06. July 2026, 13:06. Subject to be change without prior notice.

INONET
A EUROTECH COMPANY

Concepion®-jX-v4.1-U100

Additional illustrations

Technical drawing

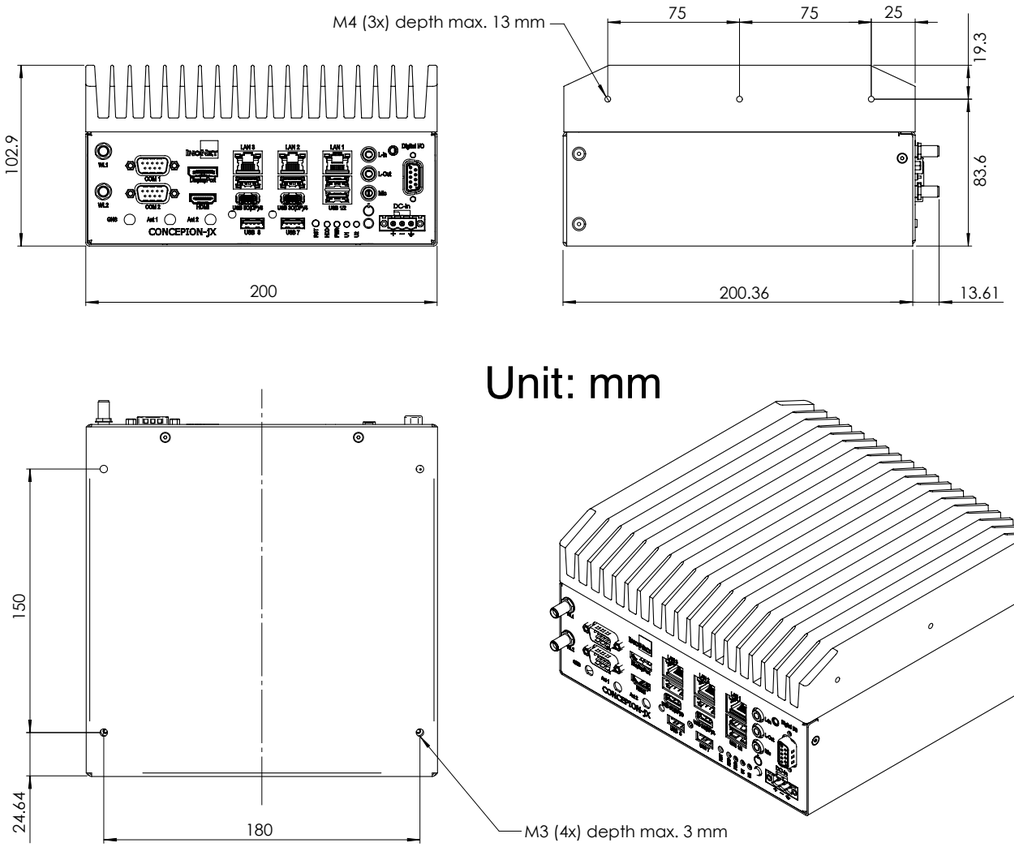

InoNet Competences and Services

Consulting *Development* *Testing* *Customization* *Manufacturing* *Certifications*

InoNet Computer GmbH
Wettersteinstraße 18
82024 Taufkirchen, Germany
www.inonet.com

www.inonet.com | Tel.: +49 89 / 666 096 - 0 | sales@inonet.com

Published: 06. July 2026, 13:06. Subject to be change without prior notice.

Concepion®-jX-v4.2-U100

Compact and fanless high performance embedded PC with one PCIe slot and Intel® Core™ Ultra CPUs

Features

- *High-Performance with Intel® Core™ Ultra CPUs*
- *One PCIe (Gen 4) expansion slot*
- *Passive cooling for flexible and quiet use*
- *Ultra-compact design*
- *USB-C & 3x 2.5 GBit LAN for high-speed data transfer*
- *Optional Wi-Fi/Bluetooth, GNSS/LTE*



Configuration example

Further configurations on request!

Mainboard:
Industrial Mainboard (mini-ITX), 24/7 operation, long-term available

Processor:
Intel® Core™ Ultra, 100 series

Graphic:
Onboard Intel® Iris® Xe (depends on CPU)

Memory:
2x DDR5 SO-DIMM, max. 64 GB

Drive Bays:
1x M.2 (M-key, type: 2280)
2x 2.5" (optional)

I/O:
3x 2.5 GBit LAN (RJ45)
4x USB 3.2
2x USB-C 3.2
2x USB 2.0
2x RS-232/422/485
1x DisplayPort 1.4a, DP++
1x HDMI 2.0a
3x Audio (Line-In, Line-Out, Mic)
1x Digital I/O (optional)

Operating System:
Microsoft® Windows® 10/11, Linux®

Power Supply:
12 ~ 24 VDC
XLR connector (Neutrik) four-pin
XLR conn. incl.
Optional
ext. power supply 100 ~ 264 VAC
XLR angled plug 90°

Expansions:
1x M.2 (E-key, type: 2230)
1x M.2 (B-key, type: 3052)
1x SIM slot
1x PCIe x4 (Gen 4) via riser card

Communication:
Wi-Fi/Bluetooth (optional)
Intel® M.2 Module, 802.11ax Dual Band, Bluetooth® 5.1
GNSS/LTE (optional)
Support for GPS, GLONASS, BeiDou, Galileo, QZSS
SIM slot for 3G/4G/G5

Mechanical:
Chassis
1 mm sheet steel, powder coated
Heat sink extruded aluminum profile
Dimensions (W x H x D)
200 x 126 x 210 mm
Cooling
Passive

Environment:
Operating Temperature
0° ~ 50° C
Storage Temperature
-20° ~ 70° C
Relative Humidity (operation)
10 ~ 90 % (non condensing)
IP Protection
IP20

Features:
Watchdog Timer, iAMT 18.0, fTPM

Published: 06. July 2026, 13:07. Subject to be change without prior notice.

Concepion®-jX-v4.2-U100

Additional illustrations

Technical drawing

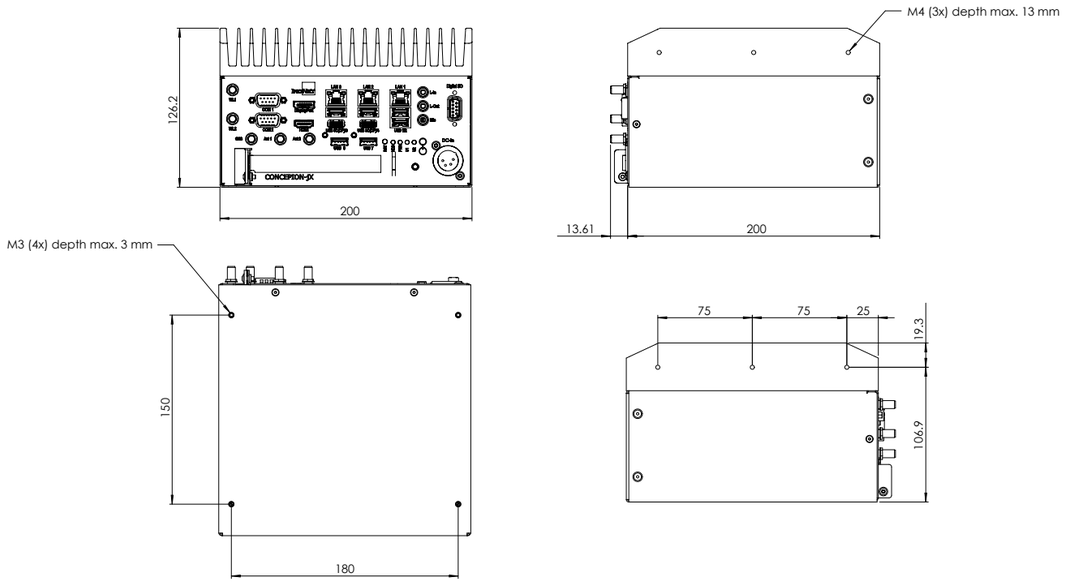

Unit: mm

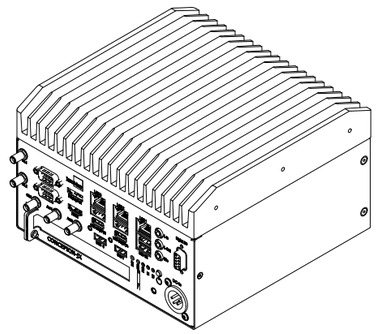

InoNet Competences and Services

Consulting | *Development* | *Testing* | *Customization* | *Manufacturing* | *Certifications* (ISO 9001)

InoNet Computer GmbH
Wettersteinstraße 18
82024 Taufkirchen, Germany
www.inonet.com

www.inonet.com | Tel.: +49 89 / 666 096 - 0 | sales@inonet.com

Published: 06. July 2026, 13:07. Subject to be change without prior notice.

ReliaCOR 31-11

Fanless Embedded Edge AI - NVIDIA Jetson Orin™ NX



- **NVIDIA® Jetson Orin™ NX, Up to 100 TOPS**
- **Best in Class Cybersecurity**
- **PoE Camera Support**
- **Connectivity Options**
- **Compact and Fanless**
- **Easy to Program**
- **Cloud Certified**

Features

GPU ACCELERATED : Powered by NVIDIA® Jetson Orin™ NX with up to 100 TOPS of GPU accelerated computing
BEST IN CLASS CYBERSECURITY : Designed to ISA/IEC 62443-4-2 SL2 (Hardware and Software), antitampering monitor and logger (always on and power independent), and TPM 2.0
CAMERA SUPPORT : 4x PoE cameras and 4x USB 3.1 cameras
CONNECTIVITY OPTIONS : Breadth of connectivity: LTE Cat 4 Global cellular (RED Certified), optional Wi-Fi 6E and Bluetooth 5.3; Dedicated GNSS
EVERYWARE GREENEDGE : The industry's first fully integrated system with Zero-Touch Provisioning (ZTP), AWS IoT Greengrass V2, Eurotech's Everyware Software Framework for IIoT equipment configuration and edge computing, and Everyware Cloud for full edge (and asset) lifecycle management.
COMPACT AND FANLESS : Offering great reliability thanks to no moving parts; no ventilation grids to prevent dust accumulation inside the unit
EASY TO PROGRAM : Build your first pilot IIoT project in a snap: from when you get the Everyware GreenEdge gateway on your desk, you need 30 minutes to gen onboard on Everyware Cloud and easily provision your gateway on your AWS IoT environment. Starting building your first edge applications like a store-and-forward datalogger in 10 minutes
CLOUD CERTIFIED : Seamless integration with Eurotech Everyware Cloud, AWS IoT Core and other Cloud services

Description

The ReliaCOR 31-11 is a compact fanless and ventless embedded Edge AI system based on NVIDIA® Jetson Orin™ NX platform, delivering up to 100 TOPS of AI performance.

Designed for industrial use cases, it offers reliable operation thanks to industrial grade ruggedization and a robust power supply. Very compact and power efficient, the ReliaCOR 31-11 can be deployed even in space constrained use cases.

The ReliaCOR 31-11 is powered by the NVIDIA® Jetson Orin™ NX platform featuring a 1024-core NVIDIA Ampere™ architecture GPU with 32 Tensor cores and an 8-core Arm® Cortex®-A78AE CPU, delivering up to 100 TOPS of AI performance. It supports rich I/O interfaces: 4x 1GbE with PoE , 4x USB 3.1 Gen 1 (5Gbps), two serial ports, 1x CAN interface and isolated Digital I/O. The ReliaCOR 31-11 features a wide range of wireless connectivity capabilities: it is available with an LTE Cat 4 Global cellular modem and discrete GNSS; other radio technologies such as Wi-Fi 6E and Bluetooth 5.3 are also available as a factory options.

The ReliaCOR 31-11 offers best in class Cybersecurity: it leads the market with the ISASecure/IEC 62443-4-2 SL2 (Factory Option) and a full trusted chain from manufacturing to deployment. Protection starts at the hardware level, with full support for TPM 2.0, Secure Boot and an always-on physical antitampering monitor/logger that is active even when the system is removed from power. For most demanding customers, special production-only images can be configured with full hardware hardening (interface disabling) to further reduce the attack surface.

The ReliaCOR 31-11 comes with Everyware Software Framework (ESF), a commercial, enterprise-ready edition of Eclipse Kura, the open source Java/OSGivmiddleware for IoT Edge Gateways. Distributed and supported by Eurotech, ESF offers ready-to-use field protocols, MQTT connectivity, web-based visual data flow programming and deep configuration. ESF is also integrated with Everyware Cloud (EC), Eurotech IoT Integration Platform (separately available), enabling advanced diagnostics, provisioning, and full remote device access and management.

ReliaCOR 31-11
Fanless Embedded Edge AI - NVIDIA Jetson Orin™ NX

Ordering Code: RECOR-31-11-xx-yy				
Hardware Configuration (-xx)		-12	-15	-21
NVIDIA MODULE	Core	NVIDIA® Jetson Orin™ NX 16GB		
	CPU	8-core NVIDIA Arm® Cortex A78AE v8.2 64-bit CPU (2MB L2 + 4MB L3)		
	GPU	1024-core NVIDIA Ampere GPU with 32 Tensor Cores		
	Memory	16GB LPDDR5		
	AI Performance	100 TOPS		
STORAGE	NVME	256GB, M.2 Key M, PCIe x4, TLC		512GB, M.2 Key M, PCIe x4, TLC
I/O INTERFACES	Ethernet	4x 1GbE (RJ-45)		
	PoE	Yes, PoE+ (1)		
	USB	4x USB 3.1 Gen 1 (Type A, 5Gbps); 1x USB OTG (Micro-B)		
	Serial	2x RS-232/485; DB9		
	CANBus	1x CANBus 2.0 (DB9)		
	Digital IN	8x Isolated; Terminal Block		
	Digital OUT	8x Isolated; Terminal Block		
	Video	1x HDMI 2K (2560 x 1440) 60Hz		
RADIO INTERFACES	Cellular	-	1x LTE Cat 4 Global	
	SIM	-	Dual Nano SIM Card Holder (User Accessible)	
	GNSS	-		GPS, Glonass, Beidou, Galileo, QZSS
	Wi-Fi/BT	Factory Option		
CYBER (HW)	TPM	TPM 2.0		
	Antitampering	Antitampering Switches		
COOLING	Technology	Fanless and Ventless		
POWER	Power Input	9 to 36V (12VDC Nominal); 3-pin Terminal Block (2)		
INTERNAL EXPANSIONS	M.2 Key B	1x M.2 Key B (3042/3052, USB 3.2 Gen1)		
	M.2 Key E	1x M.2 Key E (2230, PCIe x1, USB 2.0)		
	M.2 Key M	1x M.2 Key M (2242/2280, PCIe x4)		
ENVIRONMENTAL	Operating Temperature	-20°C to +55 °C (2)		
	Storage Temperature	-30° to 85°C		
	Relative Humidity (Non-condensing)	10 to 95% non Condensing		
CERTIFICATIONS	Regulatory	CE, FCC, ISED		
	Safety	IEC 62368-1, UL62368-1 (UL Listed) (§)		
	Radios	-	RED (EU)*	
	Environmental	ROHS3, REACH		
	Cybersecurity	ISA/IEC 62443-4-1/-4-2 SL2 (§)		
	Vibration	IEC60068-2-64:2008; Designed to comply with MIL-STD-810G Method 514.7 Procedure I		
	Shock	IEC60068-2-27:2008; Designed to comply with MIL-STD-810G Method 514.7 Procedure I		
	Ingress	IP40		
	IoT Platform	GreenEdge (§), AWS IoT GreenGrass qualified (§), AWS IoT Core qualified (§)		
MECHANICAL	Enclosure	Extruded Aluminum with Heavy Duty Metal		
	Weights	2.8 ~ 3.6 kg		
	Dimensions	192x140x58mm (WxDxH)		
	Mounting Options	Wall Mounting/DIN rail (Optional)		

* Planned or Ongoing

Note: The information in this document may be subject to change without notice and should not be construed as a commitment by Eurotech.
While responsible precautions have been taken, Eurotech assumes no responsibility for any error that may appear in this document.
All trademarks or registered trademarks are property of their respective companies

ReliaCOR 31-11
Fanless Embedded Edge AI - NVIDIA Jetson Orin™ NX

§ Factory Option (Required MOQ), Contact Eurotech for more information

(1) With input voltage 9 to 12 V DC, do not use PoE; max system power consumption = 55 W; With input voltage 12 to 24 V DC, you can use PoE only in half power budget (60 W); max system power consumption = 120 W; With input voltage 24 to 36 V DC, you can use POE in full power budget (120 W); max system power consumption = 220 W

(2) The maximum allowed current at the input power connector is 15 A. Make sure to verify compliance with this requirement based on your input voltage. The system's sustained thermal load (heat released inside the system) must not exceed 35 W when approaching the upper operating temperature limit of 55°C.

Ordering Code: RECOR-31-11-xx-yy					
Software Configuration (-yy)		-02	-03	-04	-10
OS	JetPack	Yes			
IOT FRAMEWORK	Everyware Software Framework (Java/OSGi)	-	Yes		
SUITE AND SERVICES	Everyware GreenEdge (EGE)	-		Yes (§)	
SOFTWARE HARDENING	Hardening	-			Yes (§)

§ Factory Option (Required MOQ), Contact Eurotech for more information

Note: The information in this document may be subject to change without notice and should not be construed as a commitment by Eurotech.
While responsible precautions have been taken, Eurotech assumes no responsibility for any error that may appear in this document.
All trademarks or registered trademarks are property of their respective companies

ReliaCOR 33-11

Fanless Embedded Edge AI - NVIDIA Jetson AGX Orin™



- **NVIDIA® Jetson AGX Orin™, Up to 275 TOPS**
- **Best in Class Cybersecurity**
- **Camera Support**
- **Connectivity Options**
- **Road Vehicle Certified, Designed to E-Mark**
- **Compact and Fanless**
- **Easy to Program**
- **Cloud Certified**

Features

GPU ACCELERATED : Powered by NVIDIA® Jetson AGX Orin™ with an Ampere GPU with up to 2048 CUDA cores, 64 Tensor cores that delivers up to 275 TOPS of AI performance

BEST IN CLASS CYBERSECURITY : Designed to ISA/IEC 62443-4-2 SL2 (Hardware and Software), antitampering monitor and logger (always on and power independent), and TPM 2.0

CAMERA SUPPORT : Support to 4x PoE, 1x 10GbE, up to 9x 1GbE, up to 9x USB 3.0 Gen1 and 8x GMSL2 Ports (Factory Option)

CONNECTIVITY OPTIONS : Breadth of connectivity options: LTE Cat 4 Global cellular modems for multiple geographies, Wi-Fi 6E and Bluetooth 5.3

EVERYWARE GREENEDGE : With Everyware GreenEdge, the ReliaCOR 31-11 acquires additional capabilities, evolving into the industry's first fully integrated gateway with Zero-Touch provisioning, AWS IoT Greengrass v2, Eurotech's Everyware Software Framework for IIoT equipment configuration and edge computing, and Everyware Cloud for full edge (and asset) lifecycle management

COMPACT AND FANLESS : Offering great reliability thanks to no moving parts; no ventilation grids to prevent dust accumulation inside the unit

EASY TO PROGRAM : Build your first pilot IIoT project in a snap: from when you get the Everyware GreenEdge gateway on your desk, you need 30 minutes to gen onboard on Everyware Cloud and easily provision your gateway on your AWS IoT environment. Starting building your first edge applications like a store-and-forward datalogger in 10 minutes

CLOUD CERTIFIED : Seamless integration with Eurotech Everyware Cloud, AWS IoT Core and other Cloud services

Description

The ReliaCOR 33-11 is a fanless embedded Edge AI system based on NVIDIA® Jetson AGX Orin™ that has been designed for demanding AI applications in areas such as automotive vehicles, security and surveillance, robotics, industrial automation, and smart cities.

The ReliaCOR 33-11 is powered by the NVIDIA® Jetson AGX Orin™ platform that features an Arm® Cortex®-A78AE CPU delivering up to 275 TOPS of AI performance and integrates an advanced NVIDIA Ampere architecture GPU with 64 Tensor Cores. It supports rich I/O interfaces: Up to 8x 1GbE, up to 4x PoE, 1x 10GbE, 1x USB 3.2 Gen 2 (10Gbps), up to 8x USB 3.0 Gen 1, two serial ports, 2x CAN interface, isolated Digital I/Os and 8x GMSL2 Ports (2x Quad FAKRA) as a factory option. The ReliaCOR 33-11 features with a wide range of wireless connectivity capabilities: it can integrate as a factory option a LTE Cat 4 Global cellular modem with GNSS, 5G Ready, Wi-Fi 6E and Bluetooth 5.3. Thanks to dual universal bays, additional interfaces can be added (such as 4G/5G cellular modules, 2x 10GbE ports, 4x GbE on RJ45 or M12, with optional PoE, more USB ports).

The ReliaCOR 33-11 offers best in class Cybersecurity: it leads the market with ISASecure/IEC 62443-4-1/-4-2 SL2 (Factory Option). Protection starts at the hardware level, with full support for TPM 2.0, Secure Boot and an always-on physical antitampering monitor/logger that is active even when the system is removed from power.

The ReliaCOR 33-11 comes with Everyware Software Framework (ESF), a commercial, enterprise-ready edition of Eclipse Kura, the open source Java/OSGivmiddleware for IoT Edge Gateways. Distributed and supported by Eurotech, ESF supports ready-to-use field protocols, MQTT connectivity, web-based visual data flow programming and deep configuration. ESF is also integrated with Everyware Cloud (EC), Eurotech IoT Integration Platform (separately available), enabling advanced diagnostics, provisioning, and full remote device access and management.

The ReliaCOR 33-11 can be configured with Everyware GreenEdge, the ReliaCOR 33-11 transforms into the first industrial Embedded Edge AI fully integrated with Zero-Touch provisioning and full trusted chain from manufacturing to deployment, AWS IoT Greengrass v2, and ESF+EC, providing a few-clicks onboarding experience and immediate deployment in most countries, eliminating the need for extensive coding and transforming the device management and IoT operations into a smooth workflow. In addition to its technical advantages, Everyware GreenEdge comes with a unified billing system for all software and services related costs through the Amazon Marketplace. This simplifies the procurement process, making it easier for customers to access and manage the solution while also benefiting from AWS's trusted billing infrastructure.

Ordering Code: RECOR-33-11-xx-yy

Hardware Configuration (-xx)		-01	-12	-24
NVIDIA MODULE	Core	NVIDIA® Jetson AGX Orin™ 32GB		NVIDIA® Jetson AGX Orin™ 64GB
	CPU	8-core NVIDIA Arm® Cortex A78AE v8.2 64-bit CPU, 2MB L2 + 4MB L3		12-core NVIDIA Arm® Cortex A78AE v8.2 64-bit CPU, 3MB L2 + 6MB L3
	GPU	1792-core NVIDIA Ampere GPU with 56 Tensor Cores		2048-core NVIDIA Ampere GPU with 64 Tensor Cores
	Memory	32GB LPDDR5		64GB LPDDR5
	AI Performance	200 TOPS		275 TOPS
	Embedded Storage	64GB eMMC 5.1		
STORAGE	NVME	128GB, M.2 Key M, PCIe x4, TLC	256GB, M.2 Key M, PCIe x4, TLC	512GB, M.2 Key M, PCIe x4, TLC
	SD	1x Micro SD Socket		
I/O INTERFACES	1GbE Ethernet	1x 1GbE (RJ-45)	1x 1GbE (RJ-45), 4x 1GbE with PoE (RJ-45)	9x 1GbE (RJ-45)
	PoE	-	Yes*	-
	10GbE Ethernet	1x 10GbE (RJ-45)		
	USB	1x USB 3.2 Gen 2 (Type A), Flash: 1x USB 2.0 (Type A), Console: 1x USB Type C		
	Serial	2x RS-232/422/485 (DB9)		
	CANBus	2x CANBus (DB9)		
	Digital IN	8x Isolated; Terminal Block		
	Digital OUT	8x Isolated; Terminal Block		
	Video	1x HDMI, 3840 x 2160 @ 60Hz		
	Camera Input	Factory Option: 8x GMSL2 Ports (2x Quad FAKRA) Default: Not Fitted		
RADIO INTERFACES	Cellular	Factory Option		
	GNSS	Factory Option		
	Wi-Fi/BT	Factory Option		
CYBER (HW)	TPM	TPM 2.0		
	Antitampering	Antitampering Switches		
COOLING	Technology	Fanless and Ventless		
POWER	Power Input	9 - 48VDC* Terminal Block; Ignition Key Sense		
INTERNAL EXPANSIONS	M.2 Key B	1x M.2 Key B (3042/3052, USB 3.2 Gen2)		
	M.2 Key E	1x M.2 Key E (2230, PCIe x1, USB 2.0)		
	M.2 Key M	1x M.2 Key M (2242/2260/2280, PCIe x4)		
EXTERNAL EXPANSIONS	Expansion Bays	2x Expansion Bays	1x Expansion Bays	-
ENVIRONMENTAL	Operating Temperature	-20°C to +60°C* with mild external air flow		
	Storage Temperature	-40° to 85°C		
	Relative Humidity (Non-condensing)	10 to 95% non Condensing		

Note: The information in this document may be subject to change without notice and should not be construed as a commitment by Eurotech.
While responsible precautions have been taken, Eurotech assumes no responsibility for any error that may appear in this document.
All trademarks or registered trademarks are property of their respective companies

Ordering Code: RECOR-31-11-xx-yy

Hardware Configuration (-xx)		-01	-12	-24
CERTIFICATIONS	Regulatory	CE, FCC, ISED		
	Safety	IEC 62368-1, UL62368-1 (UL Listed)		
	Radios	Factory Option: RED (EU) (§)		
	Environmental	ROHS3, REACH		
	Cybersecurity	ISA/IEC 62443-4-1/-4-2 SL2 (§)		
	Vertical	E-Mark (Automotive) (§)		
	Vibration	IEC60068-2-64:2008;Designed to comply with MIL-STD-810G Method 514.7 Procedure I		
	Shock	IEC60068-2-27:2008;Designed to comply with MIL-STD-810G Method 514.7 Procedure I		
	Ingress	IP40		
	IoT Platform	GreenEdge (§), AWS IoT GreenGrass qualified (§), AWS IoT Core qualified (§)		
MECHANICAL	Enclosure	Extruded Aluminum with Heavy Duty Metal		
	Weights	5.02 kg		
	Dimensions	270 (W) x 190 (D) x 95 (H) mm		
	Mounting Options	Wall Mounting/DIN rail (Optional)		

* Check User Manual for more information

§ Contact Eurotech

Ordering Code: RECOR-33-11-xx-yy

Software Configuration (-yy)		-02	-03	-04	-10
OS	JetPack	Yes			
IOT FRAMEWORK	Everyware Software Framework (Java/OSGi)	-	Yes		
SUITE AND SERVICES	Everyware GreenEdge (EGE)	-		Yes (§)	
SOFTWARE HARDENING	Hardening	-			Yes (§)

§ Factory Option (Required MOQ), Contact Eurotech for more information

Note: The information in this document may be subject to change without notice and should not be construed as a commitment by Eurotech.
While responsible precautions have been taken, Eurotech assumes no responsibility for any error that may appear in this document.
All trademarks or registered trademarks are property of their respective companies

ReliaCOR 40-13

Fanless Edge IPC for Industrial Applications - Up to 13th Intel Core i9

- Compact and Fanless
- Up to 13th Gen Intel Core i9
- Best in Class Cybersecurity
- Ignition Ready
- Industrial Grade
- Configuration Service



Features

Compact and Fanless : Offering great reliability thanks to no moving parts; no ventilation grids to prevent dust accumulation inside the unit
Designed for Industrial Environments : Meets the most demanding requirements of Industrial environments: select components and rigorous testing to ensure reliable operation; DC, industrial grade power supply for seamless deployment
Capable CPU : With an Intel Core 13th Gen CPU, it supports a large variety of workloads, including general purpose computing, data logging, HMI
Large Storage : One internal bay and one removable bay for 2.5" SATA drives supporting a wide range of storage capacity to support applications such as Edge Databases, NVR, data logging
Best in Class Cybersecurity : ISA/IEC 62443-4-1/-4-2 SL2 (Hardware plus Software), always on and power independent antitampering monitor and logger, TPM 2.0 and full hardware hardening
Simple to Deploy : Extremely compact to fit easily in dense installations; with wall mount and custom mounting options to simplify the deployment
Configuration Service : Highly modular design, allows for personalized configurations, ranging from personalization (branding, color) to deeper customization, to match complex project requirements

Description

The ReliaCOR 40-13 is a compact, fanless platform that supports a wide range of workloads at the Edge.

Designed for industrial use cases, it offers reliable operation thanks to industrial grade ruggedization and a robust power supply. Very compact and power efficient, the ReliaCOR 40-13 can be deployed in dense installations; an optional mounting accessory further increases its versatility. Completely fanless and without ventilation grids, it offers great resilience and reliability even under extreme load.

The ReliaCOR 40-13 features a top-of-line 13th Gen Intel Core i9 CPU, to deliver power efficient computational crunch, with plenty of RAM thanks to a dual SO-DIMM. It offers a very complete set of interfaces, including dual 2.5Gbps Ethernet with TSN support, eight USB3.2 ports (10Gbps each, great for camera input) and two serial ports; thanks to dual universal bays, additional interfaces and devices can be added (such as 4G/5G cellular modules, 2x 10GbE ports, 4x GbE on RJ45 or M12, with optional PoE, more USB ports). The ReliaCOR 40-13 is also rich in Fieldbus interfaces, with CAN, RS-232/422/485 and isolated Digital I/O.

The ReliaCOR 40-13 offers best in class Cybersecurity: it leads the market with ISA/IEC 62443-4-1/-4-2 SL2. Protection starts at the hardware level, with full support for TPM 2.0, Secure Boot and an always-on physical antitampering monitor/logger that is active even when the system is removed from power. For most demanding customers, special production-only images can be configured with full hardware hardening (interface disabling) to further reduce the attack surface.

Eurotech configuration management service offers a simple and fast way to fine tune the ReliaCOR 40-13 to your project requirements; examples of personalized configurations include custom branding (with logo and custom colors) and can go to deep customization with a range of options such as frame grabbers, choice of internal components, etc.: call us for more information on how to take advantage of the ReliaCOR 40-13 flexibility.

The ReliaCOR 40-13 comes with Everyware Software Framework (ESF), a commercial, enterprise-ready edition of Eclipse Kura, the open source Java/OSGivmiddleware for IoT Edge Gateways. Distributed and supported by Eurotech, ESF supports ready-to-use field protocols (including Modbus, OPC-UA, S7), MQTT connectivity, web-based visual data flow programming and deep configuration. ESF is also integrated with Everyware Cloud (EC), Eurotech IoT Integration Platform (separately available), enabling advanced diagnostics, provisioning, and full remote device access and management.

The device can be optionally configured with Everyware GreenEdge (EGE), IoT edge software solution qualified for AWS IoT Greengrass V2. EGE reduces onboarding time with just a few clicks, provides factory-generated trusted identity, seamless southbound connectivity, easy cloud integration and device management while consolidating IoT costs into one AWS bill.

Ordering Code: RECOR-40-13-xx-yy				
Hardware Configuration (-xx)		-11	-13	-15
PROCESSOR	CPU	Intel Core i5-13500T, 35W	Intel Core i7-13700TE, 35W	Intel Core i9-13900TE, 35W
	Cores	14 Cores: 6 P-cores + 8 E-Cores	16 Cores: 8 P-cores + 8 E-Cores	24 Cores: 8 P-cores + 16 E-Cores
	Threads	20 Threads	24 Threads	32 Threads
	Frequency	1.30GHz/ 4.50GHz	1.10GHz/ 4.80GHz	1.10GHz/ 5.00GHz
MEMORY	RAM	8GB DDR5	32GB DDR5	64GB DDR5
STORAGE	OS Storage	512GB, M.2 2242 Key B-M, MLC		
	Internal Disk	Factory Optional (2.5" SATA MLC or TLC)		
	Data Storage (Removable)	-	1x 960GB, 2.5" SATA, TLC	1x 1920GB, 2.5" SATA, TLC
I/O INTERFACES	1 GbE	-	4x 1GbE RJ-45 (I/O Module Bay #1)	
	2.5GbE	2x 2.5GbE (RJ45, i226) – with TSN, WoL, PXE		
	10GbE	-		2x 10GbE RJ-45 (I/O Module Bay #2)
	USB 2.0	2x USB 2.0 (internal)		
	USB 3.0	8x USB 3.2 Gen2 (10 Gbps) 1x USB 3.2 Gen1 (5 Gbps, Internal)		
	Serial	2x RS-232/422/485 (DB9)		
	CAN	2x CANBus (DB9)		
	Digital Output	8x Digital OUT (isolated)		
	Digital Input	8x Digital IN (isolated)		
	Audio	1x Mic-in, 1x Line-out		
Expansion Modules	I/O Module Bay #1	-	Standard: 4x 1GbE [RJ45]	
	I/O Module Bay #2	-		Standard: 2x 10GbE [RJ45]
VIDEO OUTPUT	DisplayPort	2x DisplayPort		
	VGA	Yes		
	DVI-D	Yes		
RADIOS	5G	Factory Option		
	LTE 4G	Factory Option		
	GNSS	Factory Option		
	Wi-Fi/BT	Factory Option		
CYBERSECURITY (HW)	TPM	TPM 2.0		
	Antitampering	Yes		
COOLING	Technology	Fanless and Ventless		
POWER	Power Input	9 to 48VDC (24VDC Nominal), Ignition Key		
	Consumption	60W	65W	90W
ENVIRONMENTAL	Operating Temperature	-25 to +50°C without external air flow, +65°C with mild external air flow		
	Storage Temperature	-30°C to +85°C		
	Relative Humidity (Non-considering)	10 to 95%		

Note: The information in this document may be subject to change without notice and should not be construed as a commitment by Eurotech.
While responsible precautions have been taken, Eurotech assumes no responsibility for any error that may appear in this document.
All trademarks or registered trademarks are property of their respective companies

Ordering Code: RECOR-40-13-xx-yy		
CERTIFICATIONS	Regulatory	CE, FCC, ISED
	Cybersecurity	Secure Boot, Always-on Antitamper Monitor, TPM 2.0, ISA/IEC 62443-4-1*/-4-2* SL2
	IoT Platform	GreenEdge*, AWS IoT GreenGrass qualified*, AWS IoT Core qualified*
	Safety	UL 62368-1 (UL-Mark)
	Cellular	Factory Option
	Environmental	RoHS3 & REACH
	Ingress	IP20
MECHANICAL	Enclosure	Material: Metal; Color: Black
	Dimensions (WxHxD)	240 x 79 x 261 mm (WxHxD); Excluding connectors and mounting brackets

* ongoing

Ordering Code: RECOR-40-13-xx-yy								
Software Configuration (-yy)		-03	-05	-07**	-08	-09	-11	-12**
OS	Ubuntu LTS 22.04 or later	Yes			-	Yes		
	Windows 10 IoT Enterprise LTSC 2021	-			Yes	-		
IOT FRAMEWORK	Everyware Software Framework (Java/OSGi)	Yes	-	Yes	-	Yes		
SUITE AND SERVICES	Everyware GreenEdge (EGE)**	-		Yes	-		Yes	
	Ignition Ready (IPCs)	-	Yes		-	Yes		
Software Hardening	Hardening**	-				Yes		

** Available for mid Q1 2025

Note: The information in this document may be subject to change without notice and should not be construed as a commitment by Eurotech.
While responsible precautions have been taken, Eurotech assumes no responsibility for any error that may appear in this document.
All trademarks or registered trademarks are property of their respective companies

INONET
A EUROTECH COMPANY

Concepion®-LLM-v3-L07-R680E

Compact GenAI system for AI inference with Intel® Core™ i CPUs up to 14th Gen. and NVIDIA® L4 Tensor Core GPU

Features

- *High-Performance with Intel® Core™ i CPUs 12th/13th/14th Generation*
- *Including powerful NVIDIA® L4 Tensor Core GPU for AI applications*
- *Robust full-industrial components for 24/7 operation*
- *Two additional 2.5“ shuttles*
- *Discover our free Copilot (open-source ChatBot), with which you can test various LLMs on-premise with your documents*



Configuration example

*Further configurations on request!**

Mainboard:
Industrial Mainboard (mini-ITX), 24/7 operation, long-term available

Processor:
Intel® Core™ i 12th/13th/14th Generation up to 65 Watt TDP, Socket 1700
Chipset: Intel® R680E
Intel® Turbo-Boost: Depends on the selected configuration

Memory:
2x DDR5 SO-DIMM, max. 5600 MHz
max. 64 GB

Graphic:
Onboard Intel® UHD 730/770 (depending on CPU)
AI
NVIDIA® L4 Tensor Core GPU, PCIe x8 with dedicated cooling
7680 CUDA Core, 24 GB GDDR6

AI Performance:
FP32: 30.3 TFLOPs
TF32 Tensor Core: 120 TFLOPs
FP16 Tensor Core: 242 TFLOPs
BFLOAT16 Tensor Core: 242 TFLOPs
FP8 Tensor Core: 485 TFLOPs

Drive Bays:
Internal
2x M.2 (M-key, type: 2280)
External
2x 2.5“ SATA-III SSD in shuttle

Expansions:
1x M.2 (E-key, type: 2230)

Features:
Watchdog Timer, iAMT, TPM 2.0

Operating System:
Microsoft® Windows® 10/11, Linux®

I/O:
Back
2x 2.5 GBit LAN (RJ45), 1x iAMT support
4x 10 GBit LAN (RJ45), PCIe x8 card
2x Display Port 1.4a
1x RS-232
1x RS-232/422/485
6x USB 3.2 (2x Gen 2, 4x Gen 1)
2x USB 2.0
3x Audio (Line-In, Line-Out, Mic)
Internal
1x LVDS / eDP
1x GPIO Header (8 Bit)

Power Supply:
12 ~ 48 VDC, 500/600 Watt
NL4 connector (Neutrik)
Efficiency >94%
Optional
11 ~ 30 VDC, 250/300 Watt
NL4 connector (Neutrik), four-pin with ignition pin

Mechanical:
Chassis
Robust 1 mm galvanized sheet steel with powder coating
(On request: Intrusion Detection)
Dimensions (W x H x D)
215 x 131 x 303 mm
Cooling
Active, 2x 80 mm fans
Filter cartridge incl. mat
Mounting
Wallmount, Desktop, 19“ compatible
(On request: two systems side by side)

Environment:
Operating Temperature
0° ~ 35° C
Storage Temperature
-20° ~ 70° C
Relative Humidity (operation)
10 ~ 90 % (non condensing)
IP Protection
IP20

** The final configuration must take care of the power and cooling capacity of the power supply and the system fans.*

Published: 10. December 2024, 15:50. Subject to be change without prior notice.

INONET
A EUROTECH COMPANY

Concepion®-LLM-v3-L07-R680E

Additional illustrations



Filter cartridge with filter mat

Backside



Technical drawing

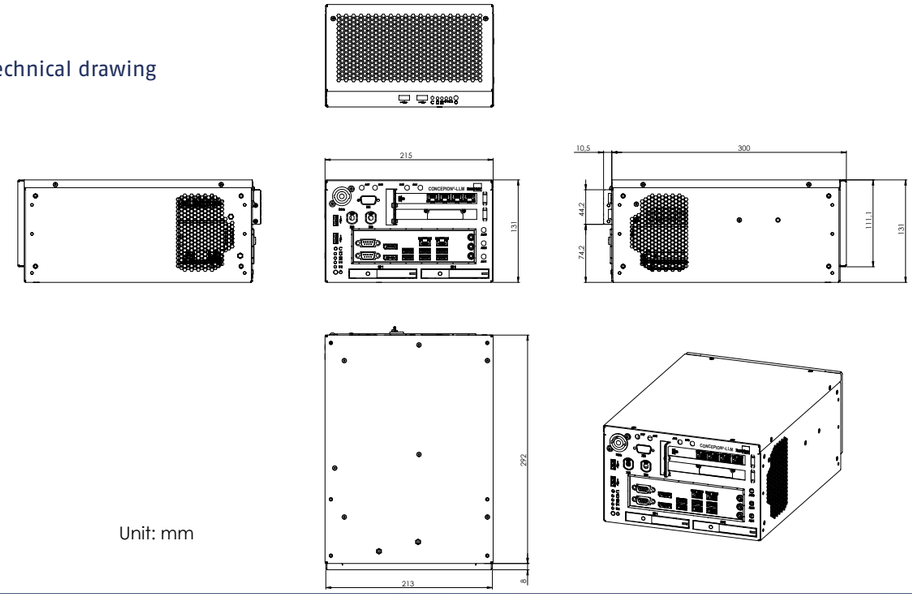

Unit: mm

InoNet Competences and Services

Consulting | *Development* | *Testing* | *Customization* | *Manufacturing* | *Certifications*

InoNet Computer GmbH
Wettersteinstraße 18
82024 Taufkirchen, Germany
www.inonet.com

www.inonet.com | Tel.: +49 89 / 666 096 - 0 | sales@inonet.com

Published: 10. December 2024, 15:50. Subject to be change without prior notice.

INONET
A EUROTECH COMPANY

Concepion®-tXf-v3-L-R680E

Compact system for edge intelligence use with Intel® Core™ i CPUs up to 14th Generation and AI support

Features

- *High-Performance with Intel® Core™ i CPUs 12th/13th/14th Generation*
- *Optional High performance GPU (VPU and FPGA on request)*
- *Edge Intelligence Gateway*
- *Optional Wi-Fi/Bluetooth/ GNSS/LTE (5G on request)*
- *Special cooling concept*
- *Robust full-industrial components for 24/7 operation*
- *Two additional 2.5“ shuttles*



Configuration example

*Further configurations on request!**

Mainboard:
Industrial Mainboard (mini-ITX), 24/7 operation, long-term available

Processor:
Intel® Core™ i 12th/13th/14th Generation up to 65 Watt TDP, Socket 1700
Chipset: Intel® R680E
Intel® Turbo-Boost: Depends on the selected configuration

Memory:
2x DDR5 SO-DIMM, max. 5600 MHz
max. 64 GB

Graphic:
Onboard Intel® UHD 730/770 (depending on CPU)
AI (optional)
NVIDIA® L4 Tensor Core GPU with dedicated cooling
RT Cores, 24 GB GDDR6, PCIe x8

Drive Bays:
Internal
2x M.2 (M-key, type: 2280)
External
2x 2.5“ SATA-III SSD in shuttle

I/O:
Back
2x 2.5 GBit LAN (RJ45), iAMT support
2x 10 GBit LAN (RJ45) (optional)
2x Display Port 1.4a
1x RS-232
1x RS-232/422/485
6x USB 3.2 (2x Gen 2, 4x Gen 1)
2x USB 2.0
3x Audio (Line-In, Line-Out, Mic)
Internal
1x LVDS / eDP
1x GPIO Header (8 Bit)

Features:
Watchdog Timer, iAMT, TPM 2.0

Operating System:
Microsoft® Windows® 10/11, Linux®

Power Supply:
12 ~ 48 VDC, 500/600 Watt
NL4 connector (Neutrik)
NL4 connector incl.
Optional
11 ~ 30 VDC, 250/300 Watt
NL4 connector (Neutrik), four-pin with ignition pin

Expansions:
2x PCIe x8 (mech. x16)
(The max. power loss must not exceed 50 Watt.)
1x M.2 (E-key, type: 2230)

Mechanical:
Chassis
Robust 1 mm galvanized sheet steel with powder coating
(On request: Intrusion Detection)
Dimensions (W x H x D)
215 x 131 x 303 mm
Cooling
Active, 2x 80 mm fans
Filter cartridge incl. mat
Mounting
Wallmount, Desktop, 19“ compatible
(On request: two systems side by side)

Communication:
Wi-Fi/Bluetooth (optional)
Intel® M.2 Module
802.11ax Dual Band 2x2 160 MHz
Bluetooth® 5.1
GNSS/LTE (optional)
Support for GPS, GLONASS, BeiDou, Galileo, QZSS, Micro SIM slot for 3G/4G (on request: 5G with additional antennas)

Environment:
Operating Temperature
0° ~ 55° C
Storage Temperature
-20° ~ 70° C
Relative Humidity (operation)
10 ~ 90 % (non condensing)
IP Protection
IP20

** The final configuration must take care of the power and cooling capacity of the power supply and the system fans.*

Published: 17. December 2024, 15:15. Subject to be change without prior notice.

INONET
A EUROTECH COMPANY

Concepion®-tXf-v3-L-R680E

Additional illustrations



Filter cartridge with filter mat

Optional with Wi-Fi/Bluetooth and GNSS/LTE



Technical drawing

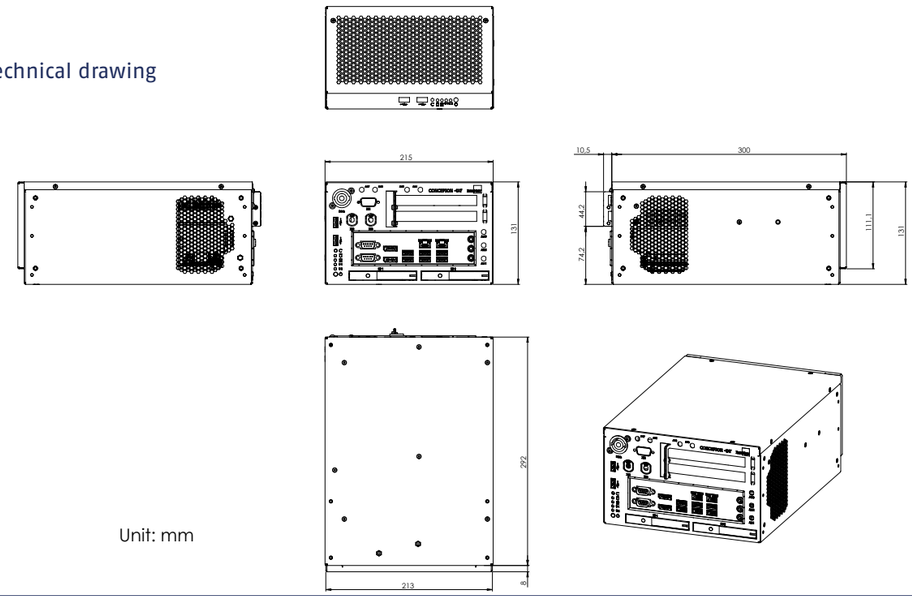

Unit: mm

InoNet Competences and Services

Consulting | *Development* | *Testing* | *Customization* | *Manufacturing* | *Certifications*

ISO 9001

InoNet Computer GmbH
Wettersteinstraße 18
82024 Taufkirchen, Germany
www.inonet.com

www.inonet.com | Tel.: +49 89 / 666 096 - 0 | sales@inonet.com

Published: 17. December 2024, 15:15. Subject to be change without prior notice.

ReliaCOR 54-13

Versatile AI Server for Industrial Applications - 1 GPU, Removable Storage, Expandable



- **Versatile Vision and Inference**
- **Industrial Grade**
- **Up to 13th Gen Intel Core i9**
- **Designed to support 1x NVIDIA RTX-4000 ADA or 1x NVIDIA L4**
- **Removable Storage Bay, Many Expansion Options**
- **Configuration Service**

Features

Data Vision and Inference : Designed for data acquisition and processing, with support for AI workloads and a range of factory options, such as Field buses (CAN, etc.), frame grabbers, etc.

Designed for Industrial Environments : Meets the most demanding requirements of Industrial environments: select components and rigorous testing to ensure reliable operation; DC, industrial grade power supply for seamless deployment

Powerful Data Aggregation and Accelerated AI : With an Intel Core 13th Gen CPU, one NVIDIA L4 GPU or 1x NVIDIA RTX-4000 ADA or 1x NVIDIA RTX-2000 ADA and many expansion options, supports a large variety of workloads, including general purpose computing, data logging, data acquisition, fusion and filtering

Removable Storage : One storage bay for 2.5" SATA drives that offer the convenience of easy access and removal

Many Expansion Options : Provides support for up to 3 PCIe cards (2x PCIe x16 Slot Gen4 + 1x PCIe x4 Gen3)

Best in Class Cybersecurity : ISA/IEC 62443-4-1/-4-2 SL2 (Hardware plus Software), always on and power independent antitampering monitor and logger, TPM 2.0 and full hardware hardening

Simple to Deploy : Extremely compact to fit easily in dense installations; with user accessible filters to protect the system from airborne pollutants; custom mounting options to simplify the development

Configuration Service : Highly modular design, allows for personalized configurations, ranging from personalization (branding, color) to deeper customization, to match complex project requirements

Description

The ReliaCOR 54-13 is a versatile platform that offers a very balanced combination of computational performance, storage capacity and network bandwidth for workloads that include data acquisition and fusion, AI inference and data logging.

Designed for Industrial use cases, it offers reliable operation thanks to industrial grade ruggedization and a robust power supply. Very compact and power efficient, the ReliaCOR 54-13 can be deployed in dense installations; an optional mounting accessory further increases its versatility.

The ReliaCOR 54-13 features a 13th Generation Intel Core i9 CPU, to deliver power efficient computational crunch, and provides AI acceleration thanks to a high-end NVIDIA L4 GPU or one NVIDIA RTX-4000 ADA or NVIDIA RTX-2000 ADA (depending on the configuration). Connection to the factory floor IP network and sensors is enabled by two 2.5 GbE interfaces that support TSN for deterministic Ethernet; use cases requiring Fieldbus interfaces towards assets (such as CAN/CAN-FD, isolated RS-232/422/485) are optionally available as a Professional Service.

With three PCIe slots (availability depends on starting configuration), the ReliaCOR 54-13 allows great flexibility in adding features to meet any use case.

**Note: The information in this document may be subject to change without notice and should not be construed as a commitment by Eurotech.
While responsible precautions have been taken, Eurotech assumes no responsibility for any error that may appear in this document.
All trademarks or registered trademarks are property of their respective companies**

ReliaCOR 54-13

Versatile AI Server for Industrial Applications - 1 GPU, Removable Storage, Expandable

The ReliaCOR 54-13 is also a capable storage server, supporting one removable bay for 2.5" SATA drives in RAID 0/1 configurations to provide high speed data recording and to offer extra protection to valuable information.

The ReliaCOR 54-13 offers best in class Cybersecurity: it leads the market with IEC 62443-4-1/-4-2 SL2. Protection starts at the hardware level, with full support for TPM 2.0, Secure Boot and an always-on physical antitampering monitor/logger that is active even when the system is removed from power. For most demanding customers, special production-only images can be configured with full hardware hardening (interface disabling) to further reduce the attack surface.

Eurotech configuration management service allows fine tuning the ReliaCOR 54-13 to meet and exceed your project requirements; examples of personalized configurations include customer branding (with logo and custom colors) and can go to deep customization with a range of options for project specific requirements (such as frame grabbers, choice of internal components, etc.): call us for more information on configuration management options.

The ReliaCOR 54-13 comes with Everyware Software Framework (ESF), a commercial, enterprise-ready edition of Eclipse Kura, the open source Java/OSGi middleware for IoT Edge Gateways. Distributed and supported by Eurotech, ESF supports ready-to-use field protocols (including Modbus, OPC-UA, S7), MQTT connectivity, web-based visual data flow programming and deep configuration. ESF is also integrated with Everyware Cloud (EC), Eurotech IoT Integration Platform (separately available), enabling advanced diagnostics, provisioning, and full remote device access and management.

The device can be optionally configured with Everyware GreenEdge (EGE), IoT edge software solution qualified for AWS IoT Greengrass V2. EGE reduces onboarding time with just a few clicks, provides factory-generated trusted identity, seamless southbound connectivity, easy cloud integration and device management while consolidating IoT costs into one AWS bill.

Ordering Code: RECOR-54-13-xx-yy

Hardware Configuration (-xx)		-21	-23	-25	-15
PROCESSOR	CPU	Intel Core i5-13500TE, 35W	Intel Core i7-13700TE, 35W	Intel Core i9-13900TE, 35W	Intel Core i9-13900T, 35W
	Cores	14 Cores: 6 P-cores + 8 E-Cores	16 Cores: 8 P-cores + 8 E-Cores	24 Cores: 8 P-cores + 16 E-Cores	
	Threads	20 Threads	24 Threads	32 Threads	
	Frequency	1.30GHz/ 4.50GHz	1.10GHz/ 4.80GHz	1.10GHz/ 5.00GHz	
MEMORY	RAM	8GB DDR5	32GB DDR5	64GB DDR5	
AI ACCELERATION	GPU	1x NVIDIA RTX-2000 ADA	1x NVIDIA RTX-4000 ADA SFF	1x NVIDIA L4	
	Number of GPUs	1x			
	RAM	16GB GDDR6	20GB GDDR6	24GB GDDR6	
	TDP	70W		72W	
	Video Output	4x mini DisplayPort outputs		-	
STORAGE	OS Storage	512GB, M.2 2242 Key B-M, MLC			
	Data Storage (Removable)	-	1x 960GB, 2.5" SATA, TLC	1x 1920GB, 2.5" SATA, TLC	
	Internal Disk	Optional (1x Internal 2.5" SATA MLC or TLC)			
I/O INTERFACES	1GbE	4x 1GbE (RJ-45)		-	
	2.5GbE	2x 2.5GbE (RJ45, i226) – with TSN, WoL, PXE			
	10GbE	-		4x 10GbE (RJ-45)	-
	USB 2.0	2x USB 2.0 (internal)			
	USB 3.0	4x USB 3.2 Gen2 (10 Gbps), 5x USB 3.2 Gen1 (5Gbps, Internal), 1x USB 3.2 Gen1 header (5 Gbps, internal)			
	Serial	2x RS-232/422/485 (DB9)			
	CAN	Factory Option: 2x CANBus			
	Digital Output	8x Digital OUT (isolated)			
	Digital Input	8x Digital IN (isolated)			
VIDEO OUTPUT	DisplayPort	2x DisplayPort			
	DVI	1x DVI-I, support resolution 1920 x 1200			
RADIOS	5G	Factory Option			
	LTE 4G	Factory Option			
	GNSS	Factory Option			
	Wi-Fi/BT	Factory Option			
CYBERSECURITY (HW)	TPM	TPM 2.0			

**Note: The information in this document may be subject to change without notice and should not be construed as a commitment by Eurotech.
While responsible precautions have been taken, Eurotech assumes no responsibility for any error that may appear in this document.
All trademarks or registered trademarks are property of their respective companies**

ReliaCOR 54-13

Versatile AI Server for Industrial Applications - 1 GPU, Removable Storage, Expandable

Ordering Code: RECOR-54-13-xx-yy

Hardware Configuration (-xx)		-21	-23	-25	-15
COOLING	Technology	Active Air Cooling			
POWER	Input	9 ~ 48VDC (24VDC), Ignition Key			
ENVIRONMENTAL	Operating Temperature	-20°C to +70*C without GPU; 0°C to +50°C with GPU			
	Storage Temperature	-30°C to +85°C			
	Relative Humidity (Non-considering)	10 to 95%			
CERTIFICATIONS	Regulatory	CE, FCC, ISED			
	Cybersecurity	Secure Boot, Always-on Antitamper Monitor, TPM 2.0, ISA/IEC 62443-4-1*/-4-2 SL2*			
	Safety	UL 62368-1 (UL-Mark)			
	Cellular	Factory Option			
	Environmental	RoHS3 & REACH			
	Ingress	IP20			
MECHANICAL	Enclosure	Material: Extruded Aluminum with Heavy Duty Metal; Color: Black			
	Dimensions (WxHxD)	177 (W) x 340 (D) x 240 (H) mm; Excluding connectors and mounting brackets			

* ongoing

Ordering Code: RECOR-54-13-xx-yy

Software Configuration (-yy)		-03	-05	-07**	-08	-09	-11	-12**
OS	Ubuntu LTS 22.04 or later	Yes			-	Yes		
	Windows 10 IoT Enterprise LTSC 2021	-			Yes	-		
IOT FRAMEWORK	Everyware Software Framework (Java/OSGi)	Yes	-	Yes	-	Yes		
SUITE AND SERVICES	Everyware GreenEdge (EGE)**	-		Yes	-			Yes
	Ignition Ready (IPCs)***	-	Yes		-		Yes	
SOFTWARE HARDENING	Hardening**	-				Yes		

** Available for mid Q1 2025

*** Not certified

**Note: The information in this document may be subject to change without notice and should not be construed as a commitment by Eurotech.
While responsible precautions have been taken, Eurotech assumes no responsibility for any error that may appear in this document.
All trademarks or registered trademarks are property of their respective companies**

Mayflower®-M7-Q670E

Compact high performance industrial PC for wall mounting with Intel® Core™ i CPUs up to 14th generation

Features

- *High-Performance with Intel® Core™ i CPUs 12th/13th/14th Generation*
- *Horizontal or vertical mounting possible*
- *Drive cage optionally rotatable by 90°*
- *Robust full-industrial components for 24/7 operation*
- *Expandable with 7 slots*



Configuration example

Further configurations on request!

Mainboard:
Industrial Mainboard (ATX), 24/7 operation, long-term availability

Processor:
Intel® Core™ i 12th/13th/14th Generation
Chipset: Intel® Q670E
Up to 65 Watt TDP

Memory:
4x DDR4 DIMM, max. 128 GB

I/O:
Back
2x GBit LAN (RJ45)
2x USB 3.2 (Gen 2)
2x USB 3.2 (Gen 1)
4x USB 2.0
1x RS-232
1x DisplayPort
1x HDMI
1x VGA
2x Audio (Line-Out, Mic)
Front
2x USB 3.2 (Gen 1)
Internal
2x USB 2.0 type A
2x USB 2.0
1x GPIO Header (8 Bit)
1x RS-232/422/485, 4x RS-232
Up to 4x SATA III with 6 Gb/s

Drive Bays:
Internal
1x M.2 (M-key, type: 2280)
2x 2.5"
External
3x 5.25"

Features:
Watchdog Timer
Intel® vPro, AMT
TPM support

Power Supply:
90 ~ 264 VAC, 400 Watt,
PS2, 80 Plus
On request: Redundant power supply for AC and DC

Expansions:
1x PCIe x16 (Gen 4), full height
1x PCIe x8 (Gen 3), full height
3x PCIe x4 (Gen 3), full height
2x PCI, full height

Mechanical:
Chassis
Industrial case made of
1 mm heavy duty steel plate
Horizontal or vertical mounting
Dimensions (W x H x D)
330 x 196 x 410 mm
Cooling
Active, 1x 120 mm fan

Graphic:
Onboard Intel® UHD 730/770
(depending on CPU)

Operating System:
Microsoft® Windows® 10/11, Linux®

Environment:
Operating Temperature
0° ~ 50° C*
Storage Temperature
-20° ~ 70° C
Relative Humidity
10 ~ 90 % (non condensing)
IP Protection
IP20

Compliance:
CE (93/68/EWG)
EMV (2014/30/EU)
Low voltage safety (2014/35/EU)

* In full expansion at full load (24/7): 0° ~ 40° C

Published: 08. January 2025, 16:43. Subject to be change without prior notice.

Mayflower®-M7-Q670E

Additional illustrations



Horizontal or vertical mounting possible

Drive cage rotatable by 90° (optional)



Mounting rails



Rear view (fig. similar)

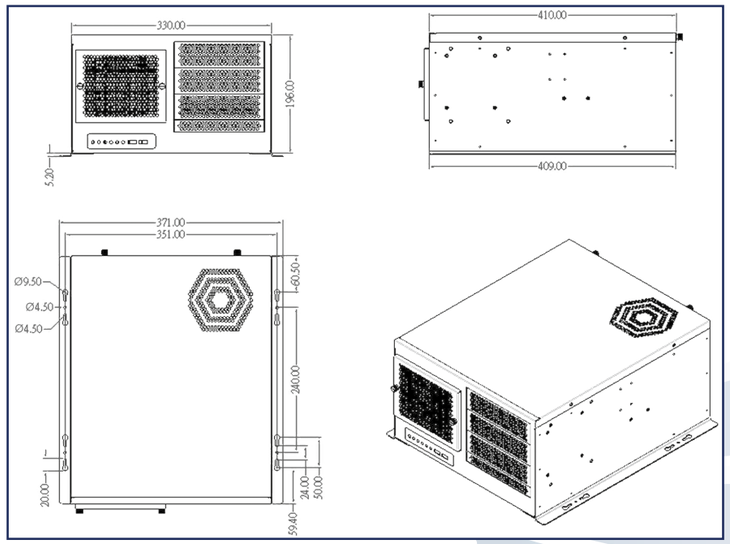

Technical drawing

InoNet Competences and Services

Consulting | *Development* | *Testing* | *Customization* | *Manufacturing* | *Certifications*

ISO 9001

InoNet Computer GmbH
Wettersteinstraße 18
82024 Taufkirchen, Germany
www.inonet.com

Published: 08. January 2025, 16:43. Subject to be change without prior notice.

INONET
A EUROTECH COMPANY

Mayflower®-M7S – 10. Gen.

Compact high performance industrial PC for wall mounting

Features

- *High performance thanks to 10th generation Intel® CPUs*
- *Horizontal or vertical mounting possible*
- *Drive cage optionally rotatable by 90°*
- *Robust full-industrial components for 24/7 operation*
- *Expandable with 7 slots and InoNet QuickTray®*



Configuration example

Further configurations on request!

Mainboard:
Industrial Mainboard (ATX), 24/7 operation, long-term availabilit
RAID 0/1/5/10, Watchdog timer

Processor:
Intel® Core™ i 10th Generation
Chipset: Intel® Q470E
Up to 125 Watt TDP

Memory:
4x U-DIMM, max. 128 GB
DDR4 2400/2666/2933 MHz

I/O:
Back
1x GBit LAN (RJ45)
1x 2.5GBit LAN (RJ45)
1x RS-232/422/485
3x USB 3.2 (Gen 2)
1x USB-C 3.2 (Gen 2)
2x USB 2.0
1x VGA, 1x HDMI, 2x DP (max. 3 usable at the same time)
1x PS/2 (combo port)
1x Audio (Line-Out, Line-In, Mic)
Internal
2x USB 3.2 (Gen 1)
2x USB 2.0 (USB-A), 2x USB 2.0
1x RS-232/422/485, 4x RS-232
Up to 6x SATA III with 6 Gb/s
1x SPI TPM
1x I2C, 1x LPT, 1x GPIO, 1x S/PDIF

Drive Bays:
Internal
2x 2.5"
External
3x 5.25"
Optional QuickTray®
Up to 14 GB/s* and 120 TB* with 4x NVMe-SSDs, uses 2x 5.25"

Power Supply:
500 Watt PS2, 80+
100 ~ 240 VAC full range

Expansions:
2x PCIe (Gen 3): 1x x16 or 2x x8
3x PCIe x4 (Gen 3)
2x PCI
full height
3x M.2 (1x M-key, 1x B-key, 1x E-key)
1x SIM slot (nano)

Mechanical:
Chassis
Industrial housing made of 1mm heavy duty steel plate
Horizontal or vertical mounting
Dimensions (W x H x D)
330 x 196 x 410 mm
Cooling
active, 120mm fan

Graphic:
Integrated in CPU
max. 4096 x 2304 @ 60 Hz

Operating System:
Microsoft Windows 10

Environment:
Operating Temperature
0° ~ 55° C**
Storage Temperature
-20° ~ 70° C
Relative Humidity
10 ~ 90 % (non condensing)
IP Protection
IP20

Compliance:
CE (93/68/EWG)
EMV (2014/30/EU)
Low voltage safety (2014/35/EU)

* Depending on SSD type and manufacturer, real measured with Iometer (continuous write mode)
** In full expansion at full load (24/7): 0° ~ 40° C

Published: 18. January 2023, 11:55. Subject to be change without prior notice.

INONET
A EUROTECH COMPANY

Mayflower®-M7S – 10. Gen.

Additional illustrations



Horizontal or vertical mounting possible

Drive cage rotatable by 90° (optional)



Mounting rails



Rear view (fig. similar)

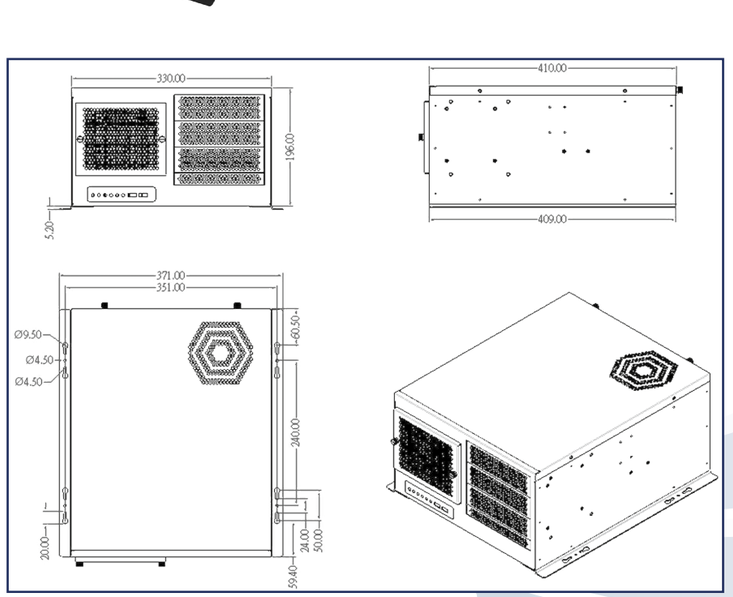

Technical drawing



InoNet QuickTray® up to 14 GB/s* and 120 TB* with 4x NVMe-SSDs

* Depending on SSD type and manufacturer, real measured with Iometer (continuous write mode)

InoNet Competences and Services

Consulting | *Development* | *Testing* | *Customization* | *Manufacturing* | *Certifications*

InoNet Computer GmbH
Wettersteinstraße 18
82024 Taufkirchen, Germany
www.inonet.com

www.inonet.com | Tel.: +49 89 / 666 096 - 0 | sales@inonet.com

Published: 18. January 2023, 11:55. Subject to be change without prior notice.

INONET
A EUROTECH COMPANY

Mayflower®-Q12W-SP5

Liquid cooled, high-performance server for AI/GPU applications with up to 12 PCIe slots

Features

- *AI support thanks to multi-GPU support and high-performance CPU*
- *Liquid cooling for CPU and GPU/tensor/network cards*
- *Ideal for industrial image and video processing with AI support*
- *Up to 12 PCIe slots of the 5th generation*
- *Robust full industrial components for 24/7 operation*



Configuration example

Further configurations on request!

Mainboard:
Industrial Mainboard (SSI CEB)
24/7 operation, long-term available

Processor:
AMD® EPYC™ 9004/9005/97x4
Socket SP5
Liquid cooled

Memory:
8x DDR5 DIMM, max. 4800 MHz
RDIMM, max. 4 TB

AI Support:
Multi-GPU support
Liquid cooled, PCIe x8/x16

Graphic:
OnBoard AST2600, 512 MB DDR4
Optional
NVIDIA® T600, 4 GB GDDR6, 4x mDP

I/O:
Back
2x 1 GBit LAN (RJ45)
2x 10 GBit LAN (RJ45)
4x 10 GBit LAN (RJ45) optional
1x Dedicated IPMI LAN (RJ45)
2x USB 3.2 (Gen 1)
1x VGA
1x UID button with LED

Drive Bays:
Internal
1x M.2 (M-key, type: 2280)
1x M.2 (M-key, type: 22110/2280)
External
2x 5.25"

Power Supply:
90 ~ 264 VAC, 1200 Watt, 80 Plus
On request: Redundant power supplies for AC and DC

Expansions:
4x PCIe x16 (Gen 5)
2x PCIe x8 (Gen 5)
full height
Extension
6x PCIe (Gen 5) slots with 40 lanes
Can be divided into PCIe x16 and PCIe x8 as required

Mechanical:
Chassis
19 Zoll 4HE Rackmount-Chassis
Dimensions chassis (W x H x D)
430 x 177 x 401 mm
Dimensions extension (W x H x D)
430 x 115 x 401 mm
Cooling
Hybrid cooling system with 2x 120 mm fans and liquid cooling for CPU and up to 5 PCIe cards
Remote radiator with 2x 120 mm fans
On request: Without liquid cooling, fully air-cooled

Environment:
Operating Temperature
-20° ~ 55° C*
Storage Temperature
-20° ~ 70° C
Relative Humidity
10 ~ 90 % (non condensing)
IP Protection
IP20

Operating System:
Microsoft® Windows® Server
Linux®

* With external radiator (25° C), in full expansion at full load (24/7): 0° ~ 40° C

Published: 15. January 2025, 16:39. Subject to be change without prior notice.

INONET
A EUROTECH COMPANY

Mayflower®-Q12W-SP5

Additional illustrations

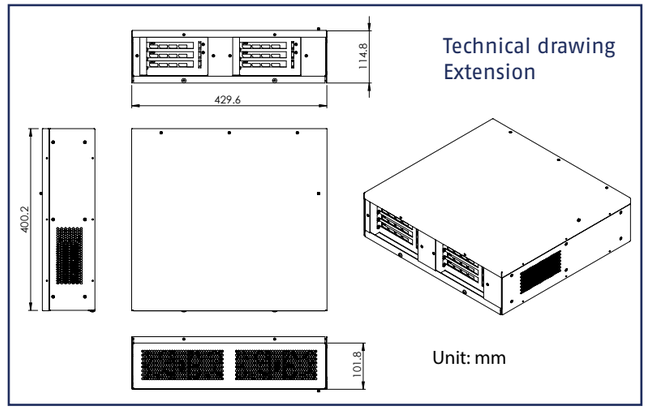



Remote radiator with 2x 120 mm fans for liquid cooling

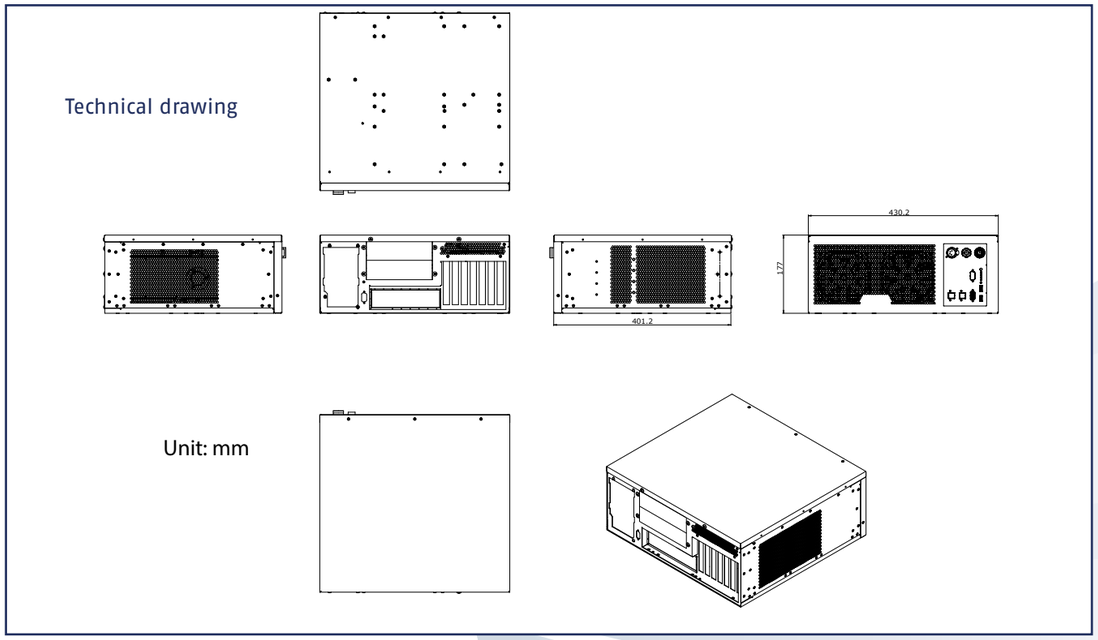

InoNet Competences and Services

Consulting | *Development* | *Testing* | *Customization* | *Manufacturing* | *Certifications* (ISO 9001)

InoNet Computer GmbH
Wettersteinstraße 18
82024 Taufkirchen, Germany
www.inonet.com

www.inonet.com | Tel.: +49 89 / 666 096 - 0 | sales@inonet.com

Published: 15. January 2025, 16:39. Subject to be change without prior notice.

INONET
A EUROTECH COMPANY

Mayflower®-SM7-Q670E

Compact high performance industrial PC for wall mounting with Intel® Core™ i CPUs up to 14th generation

Features

- *High-Performance with Intel® Core™ i CPUs 12th/13th/14th Generation*
- *Horizontal or vertical mounting possible*
- *Drive cage optionally rotatable by 90°*
- *Robust full-industrial components for 24/7 operation*
- *Expandable with 7 slots and InoNet QuickTray®*



Configuration example

Further configurations on request!

Mainboard:
Industrial Mainboard (ATX), 24/7 operation, long-term availability

Processor:
Intel® Core™ i 12th/13th/14th Generation
Chipset: Intel® Q670E
Up to 125 Watt TDP

Memory:
4x DDR4 DIMM, max. 128 GB

I/O:
Back
2x GBit LAN (RJ45)
2x USB 3.2 (Gen 2)
2x USB 3.2 (Gen 1)
4x USB 2.0
1x RS-232
1x DisplayPort
1x HDMI
1x VGA
2x Audio (Line-Out, Mic)
Front
2x USB 3.2 (Gen 1)
Internal
2x USB 2.0 type A
2x USB 2.0
1x GPIO Header (8 Bit)
1x RS-232/422/485, 4x RS-232
Up to 4x SATA III with 6 Gb/s

Drive Bays:
Internal
1x M.2 (M-key, type:2280)
2x 2.5"
External
3x 5.25"
Optional QuickTray®
Up to 14 GB/s* and 120 TB* with 4x NVMe-SSDs, uses 2x 5.25"

Features:
Watchdog Timer
Intel® vPro, AMT & TPM support

Power Supply:
500 Watt PS2, 80 Plus
90 ~ 240 VAC full range

Expansions:
1x PCIe x16 (Gen 4), full height
1x PCIe x8 (Gen 3), full height
3x PCIe x4 (Gen 3), full height
2x PCI, full height

Mechanical:
Chassis
Industrial case made of 1mm heavy duty steel plate
Horizontal or vertical mounting
Dimensions (W x H x D)
330 x 196 x 410 mm
Cooling
Active, 1x 120mm fan

Graphic:
Onboard Intel® UHD 730/770 (depending on CPU)

Operating System:
Microsoft® Windows® 10/11, Linux®

Environment:
Operating Temperature
0° ~ 50° C**
Storage Temperature
-20° ~ 70° C
Relative Humidity
10 ~ 90 % (non condensing)
IP Protection
IP20

Compliance:
CE (93/68/EWG)
EMV (2014/30/EU)
Low voltage safety (2014/35/EU)

* Depending on SSD type and manufacturer, real measured with Iometer (continuous write mode)
** In full expansion at full load (24/7): 0° ~ 40° C

Published: 19. June 2024, 12:14. Subject to be change without prior notice.

INONET
A EUROTECH COMPANY

Mayflower®-SM7-Q670E

Additional illustrations







Rear view (fig. similar)

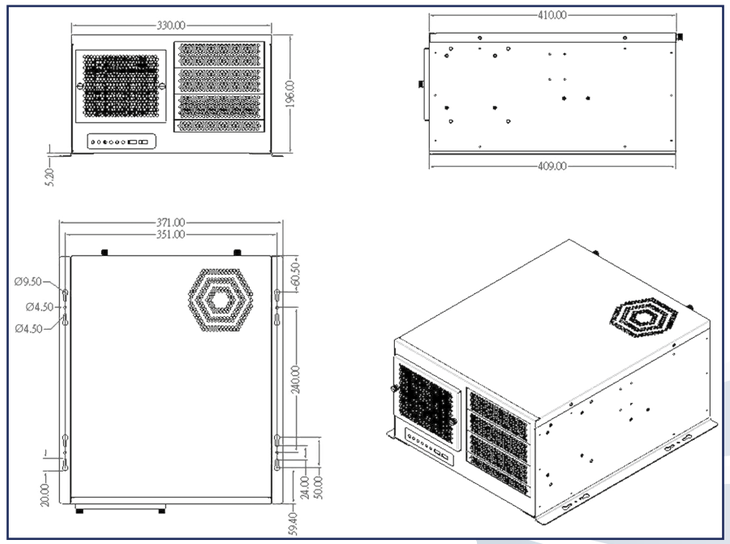

Technical drawing



InoNet QuickTray® up to 14 GB/s* and 120 TB* with 4x NVMe-SSDs

* Depending on SSD type and manufacturer, real measured with Iometer (continuous write mode)

InoNet Competences and Services

Consulting | *Development* | *Testing* | *Customization* | *Manufacturing* | *Certifications*

InoNet Computer GmbH
Wettersteinstraße 18
82024 Taufkirchen, Germany
www.inonet.com

www.inonet.com | Tel.: +49 89 / 666 096 - 0 | sales@inonet.com

Published: 19. June 2024, 12:14. Subject to be change without prior notice.

Overview Gateways

Industrial Gateways as a link between people, machines and the cloud

Gateways

Eurotech BoltGATE 10-14	Arm®	Wallmount	RED / IEC	Automotive
Eurotech DynaGATE 10-14	Arm®	Wallmount	RED / IEC	Automotive
Eurotech ReliaGATE 10-14	Arm®	DIN Rail	RED / IEC	Automotive
Eurotech ReliaGATE 15A-14	Arm®	DIN Rail	RED / IEC	

Published: 13. October 2026, 08:44. Subject to be change without prior notice.

BoltGATE 10-14

Multi-service IoT Gateway - IP67, Global Cellular LTE, Rolling Stock & Maritime applications



- **ARM® Powered, AI Acceleration**
- **Robust cybersecurity: hardware + software hardening**
- **Rolling Stock & Automotive, Maritime Applications**
- **Global cellular for worldwide connectivity**
- **Isolated Power Supply**
- **Easy to install, configure and program**
- **Cloud Certified**

Features

AI ACCELERATION : AI workload acceleration: i.MX 8M Plus providing a 2.3TOPS AI accelerator and quad core Cortex A53 performance for general purpose AI, image processing and computer vision

BEST IN CLASS CYBERSECURITY : Designed to meet ISA/IEC 62443-4-1/-4-2 SL2 (Hardware plus Software), always on and power independent antitampering monitor and logger, TPM 2.0 and full hardware hardening

RUGGED APPLICATIONS : Certified for Rolling Stock (EN5055 and EN45545) and Maritime (EN60945). Designed for Automotive, with a high level of robustness: IP67, wide operating temperature, wide range power supply and isolated & protected interfaces

IOT READY : Breadth of connectivity options: carrier certified LTE Cat 4 global cellular modem for multiple geographies, featuring automotive grade UDR GNSS. Includes: Wi-Fi/BT, Bluetooth, GbE Ethernet, CANBus ports and protected serial ports.

EASY TO PROGRAM : Full support for classic and visual programming, plus Everyware Software Framework (ESF), the IoT Java/OSGi based-middleware for IoT gateways that accelerates user application development

CLOUD CERTIFIED : Seamless integration with Eurotech Everyware Cloud, AWS IoT Core and other Cloud services

CUSTOMIZABLE : Personalization and full customization options are available, ranging from branding (“skins” and color) to deep HW/SW configurations

Description

The BoltGATE 10-14 is a Multi-service AIoT Edge Gateway designed to Rolling Stock, Maritime, Automotive and rugged applications.

The BoltGATE 10-14 offers best in class Cybersecurity: it can be certified according to ISA/IEC 62443-4-1/-4-2 SL2 as a factory option. Protection starts at the hardware level, with full support for TPM 2.0, Secure Boot and an always-on physical antitampering monitor/logger that is active even when the system is removed from power. For most demanding customers, special production-only images can be configured with full hardware hardening (interface disabling) to further reduce the attack surface.

Based on the NXP i.MX 8M Plus quad core processor, with 4GB of RAM, 32GB of eMMC, the BoltGATE 10-14 is a low power gateway suitable for very rugged use cases: it supports a isolated 9 to 35 VDC power supply with transient protection and vehicle ignition sense, two protected and isolated RS-232/422/485 serial ports, two protected and isolated CAN-FD Bus and two noise. Under the service panel, surge protected USB ports and a HDMI interface are provided for service and development. The BoltGATE 10-14 features a wide range of connectivity capabilities: it integrates a carrier certified LTE Cat 4 cellular modem, Wi-Fi, Bluetooth 5/BLE, and two Gigabit Ethernet ports. A dedicated UDR GNSS provides precise geolocation capabilities.

The BoltGATE 10-14 comes with Everyware Software Framework (ESF), a commercial, enterprise-ready edition of Eclipse Kura, the open source Java/OSGi middleware for IoT Edge Gateways. Distributed and supported by Eurotech, ESF supports ready-to-use field protocols (including Modbus, OPC-UA, S7), MQTT connectivity, web-based visual data flow programming and deep configuration. ESF is also integrated with Everyware Cloud (EC), Eurotech IoT Integration Platform (separately available), enabling advanced diagnostics, provisioning, and full remote device access and management.

Note: The information in this document may be subject to change without notice and should not be construed as a commitment by Eurotech.
While responsible precautions have been taken, Eurotech assumes no responsibility for any error that may appear in this document.
All trademarks or registered trademarks are property of their respective companies

BoltGATE 10-14

Multi-service IoT Gateway - IP67, Global Cellular LTE, Rolling Stock & Maritime applications

Hardware Ordering Code: BTGATE-10-14-03-yy		
PROCESSOR	CPU	NXP i.MX 8M Plus, 4 Core ARM Cortex A53 1.6GHz + 1 Core ARM Cortex M7 800MHz
ACCELERATORS	Neural Processor	Integrated, 2.3 TOPS
MEMORY	RAM	4GB LPDDR4 (Factory Option: 8GB)
STORAGE	Embedded	32GB eMMC (Factory Option: Up to 128GB)
	Other	1x microSD Slot (Service Panel)
I/O INTERFACES	Ethernet	2x 10/100/1000 Mbps, M12 X-Coded
	USB 3.0	2x Host 3.0 (Noise and Surge Protected) Type A (Service Panel)
	Console	1x USB 2.0 Type-C receptacle (Service Panel)
	Serial	2x RS-232/422/485; Isolated, Surge Protected; DB9 Connectors
	CAN	2x CAN-FD bus, Protected and Isolated with Termination Resistors; M12 Connectors
	Digital IN	2x Digital Input 36V, 1KV Optoisolated; DB9 Connector Isolated
	Digital OUT	2x Digital Output (40VAC/DC), 500mA Sink, 1KHz Max Switching; DB9 Connector Isolated
	Video	1x HDMI (Service Panel)
RADIO INTERFACES	Internal Cellular	1x LTE Cat 4 (Global)
	SIM Slot	1x microSIM (User Accessible, behind service panel)
	GNSS	GPS, Galileo, GLONASS, BeiDou, QZSS
	GNSS Type	Untethered Dead Reckoning (UDR); Factory Option: Real Time Kinematics (RTK) sub-meter
	Wi-Fi	802.11 a/b/g/n/ac (2.4GHz, 5GHz)
	Bluetooth	BT/BLE5.0 (2.4GHz)
	Ext. Antennas	2x SMA Cellular, 1x RP-SMA Wi-Fi/Bluetooth, 1x SMA GNSS
CYBERSECURITY (HARDWARE)	TPM	TPM 2.0
	Anti-Tamper	Yes (Enclosure and Service Panel - Always-on Monitoring and Event Logging with Time Stamping)
OTHER	RTC	Yes (SuperCAP Backup)
	Watchdog	Yes - Dedicated Chip
	EEPROM	256 Kbit
	Temp. Sensor	Yes
	Accelerometer	3D Accelerometer / 3D Gyroscope
COOLING	Technology	Compact and fanless
POWER	Input	Nominal: 12 and 24 V DC; Range: 9 to 35 V DC with Transient Protection and Vehicle Ignition Sense. M12 Connector; Isolated Power Supply
ENVIRONMENT	Operating Temp.	-40 to +70°C
	Storage Temp.	-40 to +85 °C
	Humidity	RH 5...95% Operating Non Condensing (40°C)
CERTIFICATIONS	Regulatory	CE (EU), FCC (US), ISED (CA), JATE/ TELEC (JP); Other Geography: Factory Option
	Safety	IEC 62368-1; Factory Option: UL 62368-1 (UL Mark)
	Vertical	EN 50155, EN 45545 (Rolling Stock), EN 60945 (Maritime); Designed for E-Mark (Road Vehicle)
	Radio	RED; Factory Option: PTCRB (US)
	Cybersecurity	IEC 62443-4-1 Certified; Factory Option: IEC 62443-4-2 SL2 Host
	Carrier	Factory Option: AT&T, Verizon
	Environmental	RoHS3, REACH
	Ingress	IP67 (IEC 60529)
	Impact Protection	IK8 (IEC 62262)
MECHANICAL	Dimensions	270 x 200 x 51 mm (WxDxH) - Excluding Connectors

Note: The information in this document may be subject to change without notice and should not be construed as a commitment by Eurotech.
While responsible precautions have been taken, Eurotech assumes no responsibility for any error that may appear in this document.
All trademarks or registered trademarks are property of their respective companies

BoltGATE 10-14

Multi-service IoT Gateway - IP67, Global Cellular LTE, Rolling Stock & Maritime applications

Ordering Code: BTGATE-10-14-03-yy				
Software Configuration (-yy)		-02	-03	-09
OS	Eurotech Everyware Linux	Yes		
IOT FRAMEWORK	Everyware Software Framework (Java/OSGi)	-	Yes	
SOFTWARE HARDENING	Hardening	-		Yes (§)

§ Factory Option: Contact Eurotech

Note: The information in this document may be subject to change without notice and should not be construed as a commitment by Eurotech.
While responsible precautions have been taken, Eurotech assumes no responsibility for any error that may appear in this document.
All trademarks or registered trademarks are property of their respective companies

DynaGATE 10-14

Multi-service IoT Gateway - AI Accelerated, LTE 5G Ready



- **Road Vehicle Certified, ITxPT OBU (On-Board Unit)**
- **AI Acceleration**
- **Industry Leading Cybersecurity**
- **Built-in Global LTE and 5G Ready**
- **Open Platform**
- **Customizable**

Features

Road Vehicle and ITxPT Certified : With E-Mark and ITxPT OBU (On-Board Unit) certifications, wide operating temperature, wide range power supply with transient protection, isolated and protected interfaces

AI Acceleration : AI workload acceleration: i.MX 8M Plus providing a 2.3TOPS AI accelerator and quad core Cortex A53 performance for general purpose AI, image processing and computer vision

Industry Leading Cybersecurity : Designed to be secure: hardware anti-tampering, TPM 2.0 and optional IEC 62443-4-1/-4-2 assessment (Professional Service)

Built-in Global LTE and 5G Ready : Carrier certified and ready to deploy, with a global Cat 4 LTE modem and 5G ready

Open Platform : Features Everyware Software Framework (ESF), the IoT Java/OSGi based-middleware for IoT gateways that accelerates gateway development and enables remote management

Easy to Program : Full support for classic and visual programming, plus Everyware Software Framework (ESF), the IoT Java/OSGi based-middleware for IoT gateways that accelerates user application development

Open, No lock-in : Based on open standards and Cloud provider agnostic, it can be integrated with all major platform and service provides

Customizable : Personalization and full customization options are available, ranging from branding (“skins” and color) to deep HW/SW configurations

Description

The DynaGATE 10-14 is a E-Mark certified Edge Gateway for Public Transport and Road Vehicles that enables a fast transition to ITxPT OBU both in existing and new deployments.

The DynaGATE 10-14 consolidates multiple devices in one, with significant savings while dramatically simplifying the installation and the interoperability challenges; DynaGATE 10-14 packs all the functions that would require dedicated GNSS units, Wi-Fi/BT to LTE/5G routers, IP camera processors, CAN-FD controllers

The DynaGATE 10-14 combines a rugged IoT Gateway with an AI and Computer vision platform: for instance, IP and GMSL 2 (factory option) video feeds from vehicle cameras can be processed by the integrated 2.3TOPS AI accelerator.

The DynaGATE 10-14 is a global product, certified by major LTE carriers and ready to deploy in North America, Europe and Japan; it is also 5G ready and additional cellular operator and country certifications are available as a professional service.

Cutting-edge cybersecurity is often a critical requirement: the DynaGATE 10-14 is PSA certified and can even be certified according to IEC 62443-4-1/-4-2 cybersecurity (Professional Service). System integrity and authenticity against unauthorized manipulations is layered across hardware and software: at the hardware level TPM 2.0 and an innovative, always-on, power-independent hardware antitamper monitor assure that the system has not been manipulated and that its sensitive data are safe. At a higher level, technologies such as Secure Boot and ARM Trust Zone expand the protection perimeter to the whole system.

The DynaGATE 10-14 comes with Everyware Software Framework (ESF), a commercial, enterprise-ready edition of Eclipse Kura, the open source Java/OSGi middleware for IoT Edge Gateways. Distributed and supported by Eurotech, ESF supports ready-to-use field protocols (including Modbus, OPC-UA, S7), MQTT connectivity, web-based visual data flow programming and deep configuration. ESF is also integrated with Everyware Cloud (EC), Eurotech IoT Integration Platform (separately available), enabling advanced diagnostics, provisioning, and full remote device access and management.

DynaGATE 10-14

Multi-service IoT Gateway - AI Accelerated, LTE 5G Ready

Ordering Code: DYGATE-10-14-XX			
XX		-31	-33
PROCESSOR	CPU	NXP i.MX 8M Plus, 4 Core ARM Cortex A53 1.6GHz + 1 Core ARM Cortex M7 800MHz	
ACCELERATORS	Neural Processor	Integrated, 2.3 TOPS	
	2D/3D GPU	Integrated, Shader, Vivante GC520L, Vivante GC7000UL	
MEMORY	RAM	4GB LPDDR4 (Up to 8GB); Inline ECC (Contact Eurotech for more information)	
STORAGE	Embedded	32GB eMMC (Up to 128GB)	
	Other	1x microSD Slot (User Accessible)	
I/O INTERFACES	Ethernet	2x 10/100/1000, M12 X-Coded (Factory Option: up to 4x 10/100/1000)	
	USB	2x Host 3.0 (Noise and Surge Protected), Type A	
	CAN	2x CAN-FD bus, Protected and Isolated, with Termination and Fail-safe Resistors	
	Serial	2x RS-232/422/485 (Factory Option: up to 4x RS-232/422/485)	
	Serial Protection	Isolated, Surge Protected, with Termination and Fail-safe Resistors	
	Serial Console	1x Serial Console	
	Camera Input	IP Camera	
	Digital I/O	11x Digital Input 36V, 1.5kV Isolated; 4x Digital Output (36VAC/DC), 500mA sink, 1kHz Max Switching, 1.5kV Isolated; 3x Digital Audio Outputs protected and non-isolated	
	Analog I/O	2x Analog Input 36V, 11-bit, Isolated	
	Video Out	1x HDMI with 2D/3D Acceleration	
	Audio	Stereo Line-level Audio Output	
RADIO INTERFACES	Internal Cellular	No	LTE Cat 4 (Global) - Factory Options: Cat 6, 12, 18; 5G Ready
	SIM Slot	No	1x microSIM (User Accessible)
	GNSS	GPS, Galileo, GLONASS, BeiDou, QZSS	
	GNSS Type	Untethered Dead Reckoning (UDR); Factory Option: Real Time Kinematics (RTK) sub-meter	
	Wi-Fi	No	802.11 a/b/g/n/ac (2.4GHz, 5GHz)
	Bluetooth	No	BT/BLE5.0 (2.4GHz)
	Ext. Antennas	No	2x Cellular, 1x Wi-Fi/BT, 1x GNSS Fakra (Factory Option: SMA/RP-SMA)
CYBERSECURITY (HARDWARE)	TPM	TPM 2.0	
	Anti-Tamper	Yes (Enclosure and Service Panel - Always-on Monitoring and Event Logging with Time Stamping)	
OTHER	RTC	Yes (SuperCAP Backup)	
	Watchdog	Yes - Dedicated Chip	
	EEPROM	256 Kbit	
	Temp. Sensor	Yes	
	Accelerometer	3D Accelerometer / 3D Gyroscope	
	LED	1x Power Blue, 1x Cellular Activity Green, 4x User Configurable (2x Green/Yellow, 2x Green/Red)	
	Buttons	1x Reset Button and 1x Programmable Button	
EXPANSIONS	Internal Expansion	Internal, M.2, Internal Bay #1, Internal Bay #2 (Contact Factory for Expansion Options)	
POWER	Input	Nominal: 12 and 24 VDC, Range: 9 to 35 VDC with Transient Protection and Vehicle Ignition Sense	
	Power Backup	10s Hold-up After Power Failure (Safe-shutdown); Configurable Sleep Timer, to Manage Shutdown	
	Consumption	10W Typical (Sleep <1.2W)	

Note: The information in this document may be subject to change without notice and should not be construed as a commitment by Eurotech.
While responsible precautions have been taken, Eurotech assumes no responsibility for any error that may appear in this document.
All trademarks or registered trademarks are property of their respective companies

DynaGATE 10-14

Multi-service IoT Gateway - AI Accelerated, LTE 5G Ready

Ordering Code: DYGATE-10-14-XX			
XX		-31	-33
ENVIRONMENT	Operating Temp.	-40 to +70°C	
	Storage Temp.	-40 to +85°C	
	Humidity	5 to 95% Relative Humidity (Non-condensing) at +40°C	
CERTIFICATIONS	Cybersecurity	Secure Boot, TrustZone Architecture, PSA Level 1, California SB-327, Always-on Antitamper Monitor, TPM 2.0; IEC 62443-4-1/-4-2 (§) - Hardened Production-only Images	
	IoT Platform	AWS IoT Core Qualified; AWS IoT Greengrass Qualified; Azure Certified Device; Azure IoT Plug and Play, Everyware Cloud Native	
	Regulatory	EU/UK: CE; North America: FCC, ISED; Japan: TELEC, JATE; Other Countries: Factory Option	
	Cellular	No	EU/UK: RED, Any Carriers; North America: PTCRB, AT&T, Verizon (§); Japan: Any Carriers; Other Countries: Factory Option
	Safety	CB, EN 62368-1, UL 62368-1 (§)	
	Vertical	E-Mark, ECE R10, ECE R118, EN50155 (Rolling Stock), EN45545 (Fire and Smoke), ITxPT OBU (On-Board Unit), ITxPT VCG (Vehicle Communication Gateway)**	
	Environment	RoHS3, REACH	
	Ingress	IP40	
MECHANICAL	Enclosure	Material: Aluminum; Color: Black Anodized	
	Dimensions	270 x 123 x 51mm (WxDxH) - Excluding Connectors	

§ UL, NRTL listing Factory Option.

** Certification in Plan/ Ongoing

SOFTWARE		
SOFTWARE	OS	Eurotech Everyware Linux
	SDK	Yocto-based Eclipse Tooling, Azul Java
	IoT framework	Everyware Software Framework (Java/OSGi)

Note: The information in this document may be subject to change without notice and should not be construed as a commitment by Eurotech.
While responsible precautions have been taken, Eurotech assumes no responsibility for any error that may appear in this document.
All trademarks or registered trademarks are property of their respective companies

ReliaGATE 10-14

Multi-service IoT Gateway - NXP i.MX 8M, LTE Cat 1/4, Zero Touch Provisioning



- **Robust cybersecurity: hardware + software hardening**
- **Compact, industrial-grade design and expandable capabilities**
- **Easy to install configure and program**
- **Global cellular deployment for worldwide connectivity**

Features

ARM POWERED : Powered by NXP i.MX 8M Mini CPU: quad core Cortex A53 performance for intensive workloads

EVERYWARE GREENEDGE : With Everyware GreenEdge, the ReliaGATE 10-14 acquires additional capabilities, evolving into the industry's first fully integrated gateway with Zero-Touch provisioning, AWS IoT Greengrass v2, Eurotech's Everyware Software Framework for IIoT equipment configuration and edge computing, and Everyware Cloud for full edge (and asset) lifecycle management.

BEST IN CLASS CYBERSECURITY : ANSI/ISA 62443-4-1/-4-2 SL2, IEC 62443-4-1/-4-2 SL2 (Hardware plus Software) and PSA Level 1 certified, California SB-327 compliant, always on and power independent antitampering monitor and logger, TPM 2.0 and full hardware hardening

GLOBAL CELLULAR DEPLOYMENTS : Carrier certified LTE and ready to deploy in most countries, Wi-Fi, BLE, Gigabit Ethernet and Fieldbus interfaces, supporting Modbus, S7, OPC UA, and many more protocols

EASY TO PROGRAM : Build your first pilot IIoT project in a snap: from when you get the Everyware GreenEdge gateway on your desk, you need 30 minutes to gen onboard on Everyware Cloud and easily provision your gateway on your AWS IoT environment. Starting building your first edge applications like a store-and-forward datalogger in 10 minutes.

INDUSTRIAL APPLICATIONS : Connect your industrial equipment or sensors with a simple, yet powerful configuration UI

EXPANDABLE : Add LoRa, more Digital I/O, analog inputs, and custom peripherals with side expansion modules

OPEN, NO LOCK-IN : Based on open standards and Cloud agnostic, it can be integrated with all major platform and service provides

CUSTOMIZABLE : Can be personalized and even fully customized, with options ranging from branding ("skins" and color) to deep HW/ SW changes

Description

The ReliaGATE 10-14 is an industrial, highly secure Edge Gateway that is easy to program: it supports classic and visual programming and comes with a rich and expandable IoT programming Framework. It is open and supports all major Cloud providers and services. It is suitable for immediate deployment in most countries, thanks to carrier certified LTE with 2G/3G backup connectivity, with options to expand the geographic coverage to a truly global scale.

The ReliaGATE 10-14 offers best in class Cybersecurity: it leads the market with IEC 62443-4-1/-4-2 SL2, ANSI/ISA 62443-4-1/-4-2 SL2 and PSA Level 1 certification; it is also compliant with California SB-327 password law. Protection starts at the hardware level, with full support for TPM 2.0, Secure Boot and an always-on physical antitampering monitor/logger that is active even when the system is removed from power. For most demanding customers, special production-only images can be configured with full hardware hardening (interface disabling) to further reduce the attack surface.

Based on the NXP i.MX 8M Mini Cortex-A53 quad core processor, with up to 4GB of RAM, up to 32GB of eMMC and a user-accessible microSD slot, the ReliaGATE 10-14 is a low power gateway suitable for lightly rugged use cases: it supports a 9 to 30 VDC power supply with transient protection, Display Port video output, two protected and isolated RS-232/RS-422/RS-485 serial ports, two noise and surge protected USB ports, six optoisolated digital and two isolated analog interfaces. The ReliaGATE 10-14 features a wide range of connectivity capabilities: it integrates a carrier certified LTE Cat 1/4 cellular modem with dual SIM support, Wi-Fi, Bluetooth 5/BLE, and two Gigabit Ethernet ports; an internal GNSS provides precise geolocation capabilities. Expansion options allow adding extra features with side modules, such as the ReliaWAN 10-12, a Lora Gateway unit, or the ReliaIO 10-12, which provides analog input and more DI/O ports.

ReliaGATE 10-14

Multi-service IoT Gateway - NXP i.MX 8M, LTE Cat 1/4, Zero Touch Provisioning

Ordering Code: REGATE-10-14-xy

Hardware Configuration		-x2	-x5	-x6	-x7	-x8
PROCESSOR	CPU	i.MX 8M Mini Quad Cortex-A53 1.6 GHz				
	GPU	2D and 3D Acceleration				
MEMORY	RAM	2GB (Factory Option: Up to 4GB LPDDR4)				
STORAGE	Embedded	16GB (Factory Option: Up to 32GB eMMC)				
	Additional	1x Micro SD Slot (User Accessible)				
I/O INTERFACES	Ethernet	2x 10/100/1000 - RJ45				
	USB 2.0	2x Host 2.0 (Noise and Surge Protected) - Type A				
	Serial	2x RS-232/RS422/RS-485 protected and isolated (5 wires), 1x Serial Console TTL				
	Digital I/O	4x Digital Inputs Optoisolated, 2x Digital Outputs Optoisolated				
	Analog I/O	2x Analog Inputs Isolated (11-bit, 0-36VDC)				
	Video Out	1x Video Output (Display Port)				
RADIO INTERFACES	Internal Cellular	No	LTE Cat 1 (NA)	LTE Cat 1 (EU)	LTE Cat 1 (AP)	LTE Cat 4 (CN)
	GNSS	No	GPS, Glonass, Beidou, Galileo, QZSS			
	Wi-Fi/BT	802.11 a/b/g/n/ac (2.4GHz, 5GHz) - BLE5 (2.4GHz)				
	Ext. Antennas	1x RP-SMA Wi-Fi/BT	2x SMA Cellular, 1x RP-SMA Wi-Fi/Bluetooth, 1x SMA GNSS			
OTHER	RTC	Yes (SuperCAP Backup)				
	Ext. Watchdog	Yes				
	EEPROM	256 Kbit				
	TPM	TPM 2.0				
	Anti-Tamper	Yes (2x Switches: Product Enclosure and Service Panel, Event Logging with Time Stamping)				
	Accelerometer	3D Accelerometer / 3D Gyroscope				
	LED	1x Power Blue, 1x Cellular activity Green, 4x User Configurable (2x Green, 2x Amber)				
	Buttons	1x Reset Button and 1x Programmable Button				
	SIM Slot	No	2x miniSIM (User Accessible)			
EXPANSIONS	Connector	Expansion Connector compatible with ReliaIO 10-12 and ReliaWAN 10-12				
POWER	Input	Nominal: 12 or 24 VDC; Range: 9 to 30 VDC with Transient Protection, Ignition Key Sense				
	Consumption	2.5W Idle (5W Typ.)				
ENVIRONMENT	Operating Temp.	-30 to +70 °C				
	Storage Temp.	-40 to +85 °C				
	Humidity	RH 5...95% Operating Non Condensing (40°C)				
CERTIFICATIONS	Cybersecurity	Secure Boot, TrustZone Architecture, PSA Level 1, California SB-327, Always-on Antitamper Monitor, TPM 2.0, ANSI/ISA 62443-4-1/-4-2 SL2, IEC 62443-4-1/-4-2 SL2 - Hardened Production-only Images				
	IoT Platform	Greenedge, AWS IoT Core, AWS Greengrass, Azure IoT Certified, Eurotech Everyware Cloud Native				
	Regulatory	CE, FCC, ISED, NAL, SRRC, JATE/TELEC, ICASA	FCC, ISED	CE	JATE, TELEC	NAL, SRRC
	Safety	CB, EN 62368-1, UL 62368-1 (UL Mark)				
	Vertical	E-Mark, IEC 60601-1-2				
	Environmental	ROHS3, REACH				
	Wi-Fi/BLE Radio	RED, FCC, ISED, JATE/TELEC	FCC, ISED	RED	JATE, TELEC	NAL, SRRC
	Cellular Radio	No	PTCRB, AT&T, Verizon	RED	JATE, TELEC	NAL, SRRC
	Ingress	IP40				
MECHANICAL	Enclosure	Material: Aluminium/Magnesium Alloy - Color: Aluminium				
	Dimensions	107x85x46mm (LxWxH) - Excluding Connectors, DIN Bar Mounting Bracket				

Note: The information in this document may be subject to change without notice and should not be construed as a commitment by Eurotech.
While responsible precautions have been taken, Eurotech assumes no responsibility for any error that may appear in this document.
All trademarks or registered trademarks are property of their respective companies

ReliaGATE 10-14

Multi-service IoT Gateway - NXP i.MX 8M, LTE Cat 1/4, Zero Touch Provisioning

Ordering Code: REGATE-10-14-xy

Software Configuration		-2y	-3y	-3yGE
OS	Eurotech Everyware Linux	Yes		
SDK	Yocto-based Eclipse Tooling, Azul Java	Yes		
IoT Framework	Everyware Software Framework (Java/OSGi)	No	Yes	
Suite and Services	Everyware GreenEdge (EGE)	No		Yes

Note: The information in this document may be subject to change without notice and should not be construed as a commitment by Eurotech.
While responsible precautions have been taken, Eurotech assumes no responsibility for any error that may appear in this document.
All trademarks or registered trademarks are property of their respective companies

ReliaGATE 15A-14

Modular Multi-service IoT Gateway - NXP i.MX8M Plus QuadLite, LTE Cat 4 Global, 5G Ready



- Modular Gateway, with a wide range of configuration options
- ARM NXP i.MX8M Plus QuadLite
- Cybersecurity: Hardware plus Software, certified
- Intuitive Cloud Provisioning and Device Management
- Global cellular deployment for worldwide connectivity, 5G ready
- Open Platform and Cloud certified
- Compact, Fanless, DIN Rail Optimized

Features

EXPANDABLE MODULAR GATEWAY : Offers a wide range of solutions for various use case and markets. Add LoRa, SFP ports, digital I/O, and more, including custom peripherals from a library of expansion modules

ARM POWERED : Powered by NXP i.MX8M Plus QuadLite: quad core Cortex A53 performance for intensive workloads

EVERYWARE GREENEDGE : With Everyware GreenEdge, the ReliaGATE 15A-14 acquires additional capabilities, evolving into the industry's first fully integrated gateway with Zero-Touch provisioning, AWS IoT Greengrass v2, Eurotech's Everyware Software Framework for IIoT equipment configuration and edge computing, and Everyware Cloud for full edge (and asset) lifecycle management.

BEST IN CLASS CYBERSECURITY : ISA/IEC 62443-4-1/-4-2 SL2 (Hardware plus Software) and PSA Level 1 certified, California SB-327 compliant, always on and power independent antitampering monitor and logger, TPM 2.0 and full hardware hardening

GLOBAL CELLULAR DEPLOYMENTS : Carrier certified LTE and ready to deploy in most countries, Wi-Fi, BLE, GNSS and 5G ready

EASY TO PROGRAM : Build your first pilot IIoT project in a snap: from when you get the Everyware GreenEdge gateway on your desk, you need 30 minutes to get onboard on Everyware Cloud and easily provision your gateway on your AWS IoT environment. Starting building your first edge applications like a store-and-forward datalogger in 10 minutes.

OPEN PLATFORM : Provides a Java/OSGi gateway middleware, to free the developer from proprietary solutions

CLOUD CERTIFIED : Seamless integration with Eurotech Everyware Cloud, AWS IoT Core and other Cloud services

Description

The ReliaGATE 15A-14 supports internal modularity, to conveniently enable deep personalization options. Drawing feature sets from a library of standard modules, it is possible to add as many extra capabilities as needed; examples of modules include a LoRa Concentrator, a LoRa Node, Digital and Analog

I/O expansions, extra Ethernet ports (SFP, RJ-45, SPE), a RedCap 5G cellular module, a precision GNSS module, and much more. For customers that require even more specific capabilities, Eurotech offers customization services that can meet any demand.

The ReliaGATE 15A-14 takes a novel approach at helping developers, devops and Infosec Officers in creating, securing, and administrating projects and fleets of devices throughout the entire lifecycle:

Hardware developers can leverage on a platform that is feature rich, with a wide range of radio and wired interfaces, deeply certified and fully hardened against physical cyber-attacks. An additional benefits is the internal modularity of the product, which enables a high degree of configurations that can be created by combining a library of standard and custom modules at a fraction of the cost and time usually needed for a custom design.
Application developers can accelerate dramatically the creation of their applications by exploiting the APIs and services provided by Everyware Software Framework (ESF), Eurotech's Java/OSGi middleware for IoT Edge Gateways. ESF supports ready-to-use field protocols (including Modbus, OPC-UA, S7), MQTT connectivity, and web-based visual data flow programming.
Developers of containerized solutions can exploit the native Docker support.
CISOs find the best-in-class Cybersecurity: a secure platform that has been certified to ISASecure/IEC 62443-4-2 SL2 and PSA Level 1 with an always-on physical antitampering monitor/logger that is active even when the system is removed from power. An optional service ensures that security updates are timely delivered and easily applied to ensure constant protection throughout the product's lifecycle.
Cloud developers benefit from native connectors to Eurotech Everyware Cloud, AWS and other third-party Cloud services.
Devops can speed up and simplify most tasks thanks to advanced diagnostics, Zero Touch Provisioning, full remote device access and management

ReliaGATE 15A-14

Modular Multi-service IoT Gateway - NXP i.MX8M Plus QuadLite, LTE Cat 4 Global, 5G Ready

Ordering Code: REGATE-15A-14-xx-yy

Hardware Configuration (-xx)		-03	-06	-08
PROCESSOR	CPU	i.MX 8M Plus QuadLite Quad Cortex-A53 @1.6 GHz, 1x M7 Cortex-M7 @800MHz		
MEMORY	RAM	4GB LPDDR4		
STORAGE	Embedded	32GB eMMC		
I/O INTERFACES	Ethernet	2x 10/100/1000 Mbps - RJ-45		
	USB	2x 3.0 (5Gbps) Host (Noise and Surge Protected) - Type A		
	Serial	1x RS-232/422/485 (Not Isolated, SW Termination Resistor & Mode Selection)	1x RS-232/422/485 (Not Isolated, SW Termination Resistor & Mode Selection), 1x RS-232/422/485 (1 kV Isolated, SW Termination Resistor & Mode Selection)	
	CANBus	1x CAN-FD, Protected and Isolated, with SW Termination and Fail-safe Resistors	2x CAN-FD, Protected and Isolated, with SW Termination and Fail-safe Resistors	
	Digital Input	2x Digital Input 0-36V Input Range, 1kV Isolated	2x Digital Input 0-36V Input Range, 1kV; 4x Digital IN – 0-36V Input Range, 5kV (2.7kV RMS) Optoisolated	
	Digital Output	2x Digital Output (40VAC/DC), 500mA Sink, 1KHz Max Switching Isolated	2x Digital Output (40VAC/DC), 500mA Sink, 1KHz Max Switching; 3x Digital Out – 5kV (2.7kV RMS) Optoisolated	
	Analog In	-	4x Single-ended, 0-36V, 12-bit, Isolated; Factory Option: 4-20mA Current Loop Compatibility	
	Video Out	1x HDMI Video Output (v1.4/v2.0 spec; supports 4Kp30 video resolution)		
RADIO INTERFACES	Cellular	4G LTE Cat 4 Global	-	4G LTE Cat 4 Global
	SIM/eSIM	1x microSIM (User Accessible); Option: 1x eSIM (§)	-	1x microSIM (User Accessible); Option: 1x eSIM (§)
	GNSS	GPS, GLONASS, BeiDou, Galileo, QZSS	-	GPS, GLONASS, BeiDou, Galileo, QZSS
	Wi-Fi/BT	-	802.11 a/b/g/n/ac (2.4GHz, 5GHz) - BLE5 (2.4GHz)	
	Antennas	2x SMA Cellular, 1x SMA GNSS	1x RP-SMA Wi-Fi/BT	2x SMA Cellular, 1x RP-SMA Wi-Fi/BT, 1x SMA GNSS
OTHER	RTC	Yes (SuperCAP Backup)		
	Ext. Watchdog	Yes (Independent Watchdog)		
	EEPROM	256 Kbit		
	Sensors	Temperature		
	LED	1x Power, 1x Cellular, 4x User Configurable	1x Power, 4x User Configurable	
	Buttons	1x Reset Button and 1x Programmable Button		
CYBER (HW)	TPM	TPM 2.0		
	Anti-Tamper	Yes, Always-on Physical Tampering Monitoring, Reporting and Event Logging with Time Stamping; TrustZone Architecture		
POWER	Input	Nominal: 12 or 24 VDC; Range: 9 to 30 VDC with Transient Protection, Ignition Key Sense		
	Consumption	3.5W Idle (7.5W Typ.)		
ENVIRONMENT	Operating Temp.	-25 to +70°C, Fanless		
	Storage Temp.	-40 to +85°C		
	Humidity	RH 5...95% Operating Non Condensing (40°C)		
CERTIFICATIONS	Regulatory	CE, FCC, ISED, JATE/TELEC		
	Safety	CB, IEC 62368-1, cULus Mark, Designed to be compliant with ANSI-UL 62368-1		
	Radio	RED		
	Cellular Carriers	PTCRB, AT&T, Verizon (§), T-Mobile (§), Rogers (§), Telus (§), SoftBank (§), KDDI (§), NTT DoCoMo (§)	-	PTCRB, AT&T, Verizon (§), T-Mobile (§), Rogers (§), Telus (§), SoftBank (§), KDDI (§), NTT DoCoMo (§)
	Environmental	ROHS3, REACH		

Note: The information in this document may be subject to change without notice and should not be construed as a commitment by Eurotech.
While responsible precautions have been taken, Eurotech assumes no responsibility for any error that may appear in this document.
All trademarks or registered trademarks are property of their respective companies

ReliaGATE 15A-14

Modular Multi-service IoT Gateway - NXP i.MX8M Plus QuadLite, LTE Cat 4 Global, 5G Ready

Ingress	IP40	
MECHANICAL	Enclosure	Material: Aluminium - Color: Dark Grey/Purple
	Dimensions	117x60x132mm (LxWxH) - Excluding Connectors, DIN Bar Mounting Bracket
	Weight	< 0.7 kg (depending on configuration)

§ Contact Eurotech

Ordering Code: REGATE-15A-14-xx-yy

Software Configuration (-yy)		-02	-03	-04	-09	-10
OS	Eurotech Everyware Linux	Yes				
IOT FRAMEWORK	Everyware Software Framework (Java/OSGi)	-	Yes			
Suite and Services	Everyware GreenEdge (EGE)	-		Yes	-	Yes
SOFTWARE HARDENING	Hardening**	-			Yes	
CERTIFICATIONS	Cybersecurity**	-			ISASecure/IEC 62443-4-1/-4-2 SL2 Host**	
	IoT Platform	-		AWS IoT Core*, AWS IoT GreenGrass*	-	AWS IoT Core*, AWS IoT GreenGrass*

* Certification ongoing or planned

* * Available for late Q2'2025

§ Factory Option: Contact Eurotech

Note: The information in this document may be subject to change without notice and should not be construed as a commitment by Eurotech.
While responsible precautions have been taken, Eurotech assumes no responsibility for any error that may appear in this document.
All trademarks or registered trademarks are property of their respective companies



InoNet QuickTray® Computing Ecosystem

The complete range of hardware solutions for vehicle development

Testing and validation during the development of Advanced Driver Assistance Systems (ADAS) and Autonomous Driving (AD) functions places high demands on the hardware. From SAE Level 3 to 5 of autonomous driving, the raw sensor data increases almost exponentially during test drives. As a result, high data write rates, massive computing power and large mass storage devices are required to ensure functionality and security.

InoNet QuickTray® Ecosystem

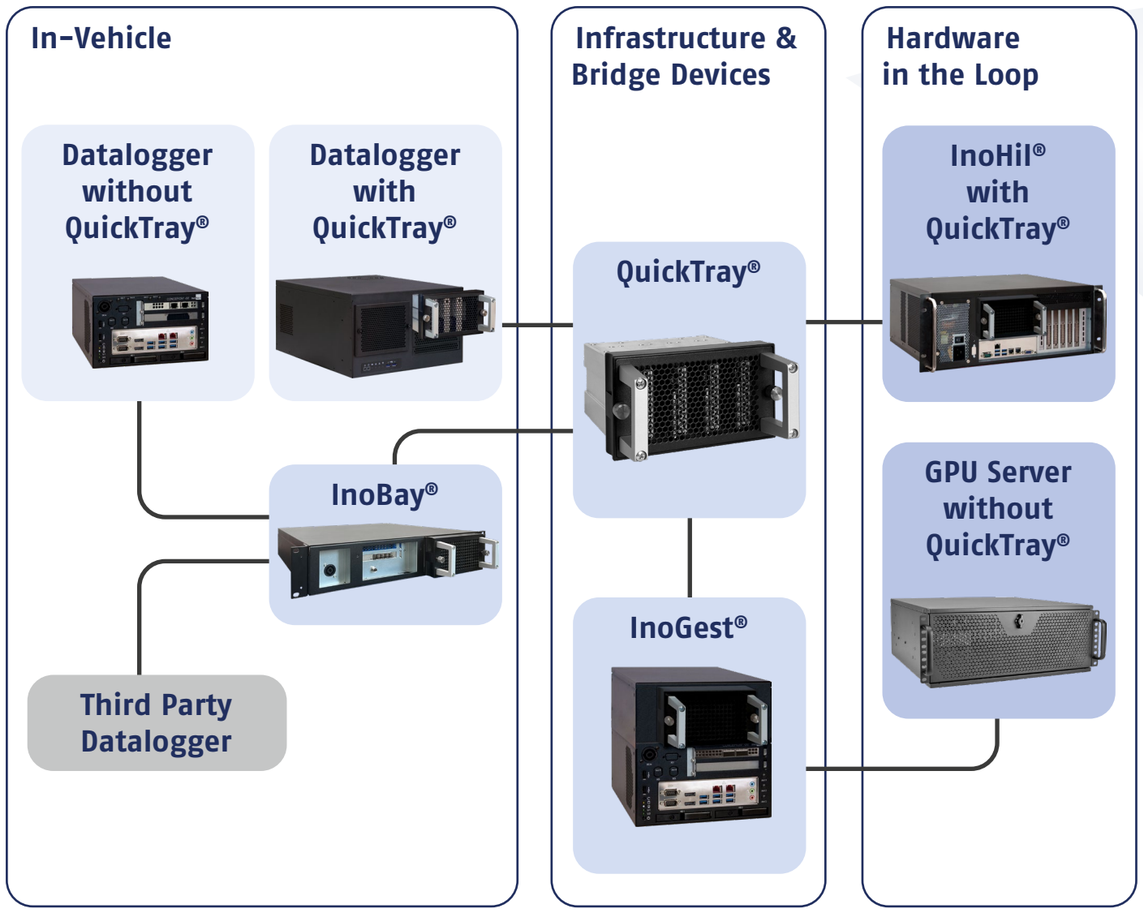

Overview Automotive

Scalable computing solutions for ADAS/AD in vehicle development

In-Vehicle

Concepion®-bX3	Intel® Core™ i	LAN	4x Bay / 2x M.2	2x PCIe
Concepion®-hXa-v3-S-Q670E	Intel® Core™ i	LAN / WiFi / BT	1x Bay / 1x M.2	1x PCIe
Concepion®-jXa - 10. Gen.	Intel® Core™ i	LAN / WiFi / BT	2x Bay / 2x M.2	
Concepion®-jXa-v4-Q670E	Intel® Core™ i	LAN / WiFi / BT / Mobile / GPS	2x Bay	
Concepion®-SbXa-v3-Q670E	Intel® Core™ i	LAN / WiFi / BT / Mobile / GPS	4x Bay / 2x M.2	2x PCIe
Concepion®-tXfa-v3-L-R680E	Intel® Core™ i	LAN / WiFi / BT / Mobile / GPS	2x Bay / 3x M.2	
Concepion®-tXf-L-v3 - 10. Gen.	Intel® Core™ i	LAN / WiFi / BT / Mobile / GPS	2x Bay / 2x M.2	2x PCIe
Concepion®-tXf-L-v3 - 12. Gen.	Intel® Core™ i	LAN / WiFi / BT / Mobile / GPS	2x Bay / 2x M.2	
Mayflower®-B17	Intel® Xeon®	LAN	4x Bay	6x PCIe
Mayflower®-B17-LiQuid-vE	AMD® EPYC™	LAN	3x Bay / 2x M.2	7x PCIe
Mayflower®-B17-LiQuid-vX	Intel® Xeon®	LAN	2x Bay / 1x M.2	6x PCIe
Mayflower®-Q5aW-SP6	AMD® EPYC™	LAN	3x Bay / 2x M.2	4x PCIe
Mayflower®-Q12aW-SP5	AMD® EPYC™	LAN	2x M.2	12x PCIe

Storage

InoBay™-2U		SFF-8644	1x Bay	
QuickTray®				
QuickTray®-v3				

Ingest

Concepion®-tXf-L-v3 - Copy Station	Intel® Core™ i	LAN / WiFi / BT / Mobile / GPS	2x Bay / 2x M.2	
InoGest® Copy-Server II-Q-SP3	AMD® EPYC™	LAN	2x M.2	1x PCIe
InoGest® Copy-Station tXf-v3-L-R680E	Intel® Core™ i	LAN / WiFi / BT / Mobile / GPS	2x Bay / 2x M.2	
InoGest® Copy-Station tXf-v3-L-AM5	AMD® EPYC™ AMD® Ryzen™	LAN / WiFi / BT / Mobile / GPS	2x Bay / 3x M.2	

HiL

InoHiL®-B17QW-SP3	AMD® EPYC™	LAN	1x Bay / 2x M.2	7x PCIe
InoHiL®-II-C621	Intel® Xeon®	LAN	5x Bay / 1x M.2	7x PCIe
InoHiL®-II-Q-C621	Intel® Xeon®	LAN	3x Bay / 1x M.2	5x PCIe

Published: 13. October 2026, 08:44. Subject to be change without prior notice.

INONET
A EUROTECH COMPANY

Concepion®-bX3 v2

Compact and fanless high performance embedded system for ADAS and AD development in vehicles

Features

- High performance through 9th Generation Intel® Core™ i CPUs (10th Generation on request)
- RAM up to 32GB DDR4 SO-DIMM
- Expandable by two PCIe slots
- Two 2.5“ shuttles with hot-swap function
- Passive cooling
- Resistant to shock and vibration
- Configurable automotive power supply (up to 140 Watt) with lockable Neutrik connector

Configuration example

Further configurations on request!

Mainboard:
Industrial Mainboard, 24/7 operation, long-term availability

Processor:
Intel® Core™ i 9th Generation
Intel® Pentium® / Celeron®
(up to 35 Watt)
Chipset: Intel® C246
Intel® Core™ i 10th Gen. on request

Graphic:
Onboard Intel® UHD P630

Memory:
2x DDR4 SO-DIMM, max. 32GB, ECC

I/O:
2x GBit LAN (RJ45) 2x RS-232/422/485
2x RS-232 (optional)
1x DisplayPort 1.2
1x HDMI 1.4
1x DVI-D
6x USB 3.0
2x USB 2.0
3x Audio (Mic, Line-In, Line-out)

Drive Bays:
2x 2.5“ (internal)
2x 2.5“ (in removable frame)

Operating System:
Microsoft Windows 10

Power Supply:
11 ~ 32 VDC, M2-ATX
XLR connector (Neutrik) four pin with ignition pin

Expansions:
PCIe
2x PCIe x8 (full-height, half-length)
(The max. power loss must not exceed 50 Watt.)
M.2
1x M.2 (E-key, type:2230)
1x M.2 (M-key, type:2280)
Additional expansions
for automotive applications
(Ethernet, CAN, LIN®, etc.)

Mechanical:
Dimensions (W x H x D)
250 x 145 x 260 mm
Cooling
Passive

Environment:
Operating Temperature
0° ~ 45° C
Storage Temperature
-20° ~ 70° C
IP Protection
IP40

Features:
Watchdog Timer
TPM 2.0
iAMT 11.6



Picture similar

Published: 16. January 2024, 13:28. Subject to be change without prior notice.

Automotive
IN-VEHICLE

INONET
A EUROTECH COMPANY

Concepion®-hXa-v3-S-Q670E

Extremely robust embedded PC with passive cooling, suited for ADAS development in vehicles

Features

- *High-Performance with Intel® Core™ i CPUs 12th/13th/14th Generation*
- *Resilient, fully enclosed system with no rotating parts*
- *Passive cooling for temperature range of -10°C ~ 50°C*
- *Optional with Wi-Fi/Bluetooth*
- *1x PCIe x16 expansion slot*
- *One additional 2.5“ shuttle*



Configuration example

Further configurations on request!

Mainboard:
Industrial Mainboard (mini-ITX), 24/7 operation, long-term availability

Processor:
Intel® Core™ i 12th/13th/14th Generation
Intel® Pentium® / Celeron®
(up to 45 Watt)
Chipset: Intel® Q670E

Graphic:
Onboard Intel® UHD 730/770
(depends on CPU)

Memory:
2x DDR5 SO-DIMM, max. 64GB

I/O:
1x 1 GBit LAN (RJ45)
1x 2.5GBit LAN (RJ45), vPro support
2x USB 3.2 (Gen 2)
1x USB 3.2 (Gen 1)
1x USB-C 3.2 (Gen 2)
4x USB 2.0
1x RS-232/422/485
3x DisplayPort 1.4
1x HDMI 2.0
2x Audio (Line-In, Line-Out)
2x PS/2 (Mouse and Keyboard)
Internal
1x USB-A 3.2 (Gen 2)
1x GPIO Header (8 Bit), 3.3 Volt

Drive Bays:
1x 2.5“ (in removable frame)

Communication:
Wi-Fi/Bluetooth (optional)
Intel® M.2 Module
802.11ax Dual Band
Bluetooth® 5.1

Operating System:
Microsoft® Windows® 10/11, Linux®

Power Supply:
11 ~ 32 VDC, 95 Watt
XLR connector (Neutrik) four-pin with ignition pin, XLR conn. incl.
Optional
ext. power supply 100 ~ 264 VAC
XLR angled plug 90°

Expansions:
PCIe
1x PCIe x16 (Gen 5), low-profile
max. 6 Watt (passive cooling)
M.2
1x M.2 (E-key, type: 2230)
1x M.2 (M-key, type: 2242/2260/2280)
Additional expansions
for automotive applications
(Ethernet, CAN, LIN®, etc.)

Mechanical:
Chassis
Robust sheet metal
Dimensions (W x H x D)
309 x 90 x 243.5 mm
Cooling
Passive, large area heat sink

Environment:
Operating Temperature
-10° ~ 50° C
Shock
5 g / 2 ms
Vibration (operation)
0.6 g (10 - 200 Hz)
Storage Temperature
-20° ~ 70° C
Relative Humidity (operation)
10 ~ 90 % (non condensing)
IP Protection
IP20

Features:
Watchdog Timer, iAMT
SPI TPM Header, Onboard PTT (dTPM)

Published: 29. April 2026, 08:57. Subject to be change without prior notice.

Automotive
IN-VEHICLE

INONET
A EUROTECH COMPANY

Concepion®-hXa-v3-S-Q670E

Additional illustrations

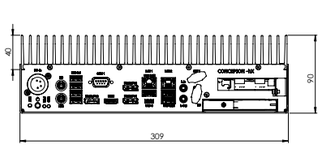

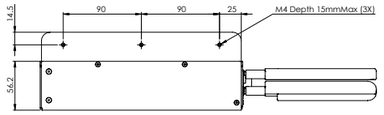

Technical drawing

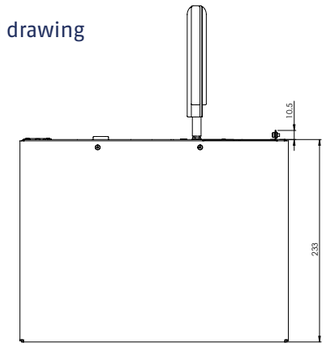

Unit: mm

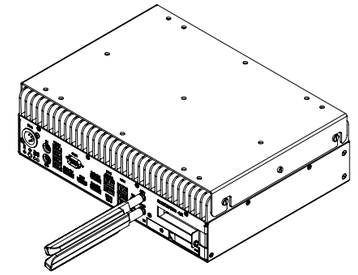

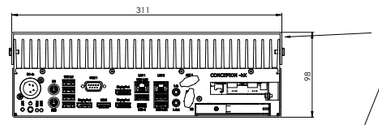

Wallmount optional

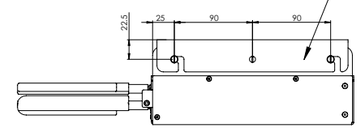

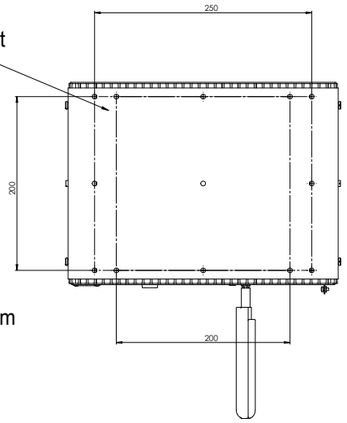

Unit: mm

InoNet Competences and Services

Consulting | *Development* | *Testing* | *Customization* | *Manufacturing* | *Certifications*

InoNet Computer GmbH
Wettersteinstraße 18
82024 Taufkirchen, Germany
www.inonet.com

www.inonet.com | Tel.: +49 89 / 666 096 - 0 | sales@inonet.com

Published: 29. April 2026, 08:57. Subject to be change without prior notice.

INONET
A EUROTECH COMPANY

Concepion®-jXa

Fanless embedded PC for in-vehicle use with radio remote control (Remote On/Off / Reset) and WLAN

Features

- High power density with 10th Generation Intel® Core™ i CPUs
- Passive cooling and 24/7 operation
- More comfort with optional wireless remote control
- Optional WLAN / BT module
- Externally accessible 2x 2.5“ shuttles for easy hard disk replacement during operation
- Customizability
- Shock and vibration protected

Configuration example

Further configurations on request!

Mainboard:
Industrial Mainboard, 24/7 operation, long-term availability

Processor:
Intel® Core™ i 10th Generation
Intel® XEON® W on request
Chipset: Intel® W480E
Intel® Turbo-Boost: Depends on the selected configuration

Graphic:
Onboard Intel® UHD 630

Memory:
2x DDR4 SO-DIMM, max. 64GB

I/O:
2x GBit LAN (RJ45)
2x GBit LAN über M.2 (optional)
WLAN / BT Modul (optional)
2x RS232/422/485
6x USB 3.2
2x USB 2.0
1x DisplayPort 1.2
1x DVI-D
1x HDMI 1.4
3x Audio (Line-In, Line-Out, Mic)

Drive Bays:
2x 2.5“ SATAIII SSDs in shuttle
RAID 0/1/5/10 (optional)

Power Supply:
11 ~ 32 VDC, 95 Watt, M2-ATX
XLR connector (Neutrik) four pin with ignition pin, XLR connector incl.
Optional
ext. power supply 100 ~ 240 VAC
XLR angle plug 90°

Expansions:
1x M.2 (E-key, type:2230)
1x M.2 (M-key, type:2280)

Mechanical:
Chassis
1 mm sheet steel, powder coated
Heat sink extruded aluminum profile
Dimensions (W x H x D)
200 x 126 x 206 mm
Cooling
Passive, available in 2 convection directions (90°)

Environment:
Operating Temperature
-10° ~ 55° C
Storage Temperature
-20° ~ 70° C
Shock (operation)
5 g (2 ms duration)
Vibration (operation)
0,6 g (10- 200 Hz)
IP Protection
IP20

Features:
Wireless radio remote control (2.4Ghz) for remote on / off / reset (optional)
TPM 2.0
iAMT 14.0

Operating System:
Microsoft Windows 10



Published: 16. January 2024, 13:30. Subject to be change without prior notice.

Automotive
IN-VEHICLE

INONET
A EUROTECH COMPANY

Concepion®-jXa-v4-Q670E

Extreme compact and fanless high performance measurement system for ADAS development in vehicles

Features

- *High-Performance with Intel® Core™ i CPUs 12th/13th/14th Generation*
- *Incl. Wi-Fi/Bluetooth, GNSS/LTE*
- *Two 2.5" shuttles with hot-swap function*
- *Passive cooling for flexible and quiet use*
- *Resistant to shocks and vibrations*
- *USB-C & 3x 2.5 GBit LAN for fast data transfer*

Configuration example

Further configurations on request!

Mainboard:
Industrial Mainboard (mini-ITX), 24/7 operation, long-term available

Processor:
Intel® Core™ i 12th/13th/14th Generation
Intel® Pentium® / Celeron®
(up to 35 Watt)
Chipset: Intel® Q670E
Intel® Turbo-Boost: Depends on the selected configuration

Graphic:
Onboard Intel® UHD 730/770 (depends on CPU)

Memory:
2x DDR5 SO-DIMM, max. 64GB

Drive Bays:
2x 2.5" (in removable frame)

I/O:
1x 1 GBit LAN (RJ45)
3x 2.5 GBit LAN (RJ45), vPro support
2x USB 3.2 (Gen 2)
1x USB 3.2 (Gen 1)
1x USB-C 3.2 (Gen 2)
6x USB 2.0
1x RS-232/422/485
3x DisplayPort 1.4
1x HDMI 2.0
2x Audio (Line-In, Line-Out)
2x PS/2 (Mouse and Keyboard)
Internal
1x USB-A 3.2 (Gen 2)
1x GPIO Header (8 Bit), 3.3 Volt

Features:
Watchdog Timer, iAMT
SPI TPM Header, Onboard PTT (dTPM)

Operating System:
Microsoft® Windows® 10/11, Linux®

Power Supply:
11 ~ 32 VDC, 95 Watt, M2-ATX
XLR connector (Neutrik) four-pin with ignition pin, XLR conn. incl.
Optional
ext. power supply 100 ~ 264 VAC
XLR angled plug 90°

Expansions:
Additional expansions
for automotive applications (Ethernet, CAN, LIN®, etc.)

Communication:
Wi-Fi/Bluetooth
Intel® M.2 Module, 802.11ax Dual Band, Bluetooth® 5.1
GNSS/LTE
Support for GPS, GLONASS, BeiDou, Galileo, QZSS
Micro SIM slot for 3G/4G
(On request: 5G with additional antennas)

Mechanical:
Chassis
1 mm sheet steel, powder coated
Heat sink extruded aluminum profile
Dimensions (W x H x D)
200 x 126 x 206 mm
Cooling
Passive

Environment:
Operating Temperature
-10° ~ 55° C
Shock
5 g / 2 ms
Vibration (operation)
0.6 g (10 - 200 Hz)
Storage Temperature
-20° ~ 70° C
Relative Humidity (operation)
10 ~ 90 % (non condensing)
IP Protection
IP20



Published: 31. March 2025, 09:02. Subject to be change without prior notice.

Intel® Core™ i | LAN / WiFi / BT / Mobile / GPS | 4x Bay / 2x M.2 | 2x PCIe

Concepion®-SbXa-v3-Q670E

Compact and fanless high performance measurement system for ADAS development in vehicles

Features

- *High-Performance with Intel® Core™ i CPUs 12th/13th/14th Generation*
- *High flexibility due to multiple interfaces*
- *Optionally with Wi-Fi/Bluetooth, GNSS/LTE on request*
- *Expandable by two PCIe slots*
- *Two 2.5“ shuttles with hot-swap function*
- *Passive cooling*
- *Resistant to shock and vibration*



Configuration example

Further configurations on request!

Mainboard:
Industrial Mainboard (mini-ITX), 24/7 operation, long-term available

Processor:
Intel® Core™ i 12th/13th/14th Generation
Intel® Pentium® / Celeron®
(up to 35 Watt)
Chipset: Intel® Q670E
Intel® Turbo-Boost: Depends on the selected configuration

Graphic:
Onboard Intel® UHD 730/770
(depends on CPU)

Memory:
2x DDR5 SO-DIMM, max. 64GB

Drive Bays:
2x 2.5“ (internal)
2x 2.5“ (in removable frame)

I/O:
1x GBit LAN (RJ45)
1x 2.5GBit LAN (RJ45), vPro support
2x GBit LAN (RJ45) (optional)
2x USB 3.2 (Gen 2)
1x USB 3.2 (Gen 1)
1x USB-C 3.2 (Gen 2)
6x USB 2.0
1x RS-232/422/485
2x RS-232 (optional)
3x DisplayPort 1.4
1x HDMI 2.0
2x Audio (Line-In, Line-Out)
2x PS/2 (Mouse and Keyboard)
Internal
1x USB-A 3.2 (Gen 2)
1x GPIO Header (8 Bit), 3.3 Volt

Features:
Watchdog Timer, iAMT
SPI TPM Header, Onboard PTT (dTPM)

Operating System:
Microsoft® Windows® 10/11, Linux®

Power Supply:
11 ~ 32 VDC, 95 Watt, M2-ATX
XLR connector (Neutrik) four-pin with ignition pin, XLR conn. incl.
Optional
ext. power supply 100 ~ 264 VAC
XLR angled plug 90°

Expansions:
PCIe
2x PCIe x8 (Gen 4) via riser card
(The max. power loss must not exceed 50 Watt.)
M.2
1x M.2 (E-key, type: 2230)
1x M.2 (M-key, type: 2242/2260/2280)
Additional expansions
for automotive applications
(Ethernet, CAN, LIN®, etc.)

Communication:
Wi-Fi/Bluetooth (optional)
Intel® M.2 Module, 802.11ax Dual Band, Bluetooth® 5.1
GNSS/LTE (on request)
Support for GPS, GLONASS, BeiDou, Galileo, QZSS
Micro SIM slot for 3G/4G

Mechanical:
Dimensions (W x H x D)
250 x 145.5 x 262 mm
Cooling
Passive

Environment:
Operating Temperature
-10° ~ 55° C
Shock
5 g / 2 ms
Vibration (operation)
0.6 g (10 - 200 Hz)
Storage Temperature
-20° ~ 70° C
Relative Humidity (operation)
10 ~ 90 % (non condensing)
IP Protection
IP20

Published: 13. May 2024, 08:40. Subject to be change without prior notice.

Concepion®-SbXa-v3-Q670E

Additional illustrations



Optional with Wi-Fi/Bluetooth

Technical drawing

Unit: mm

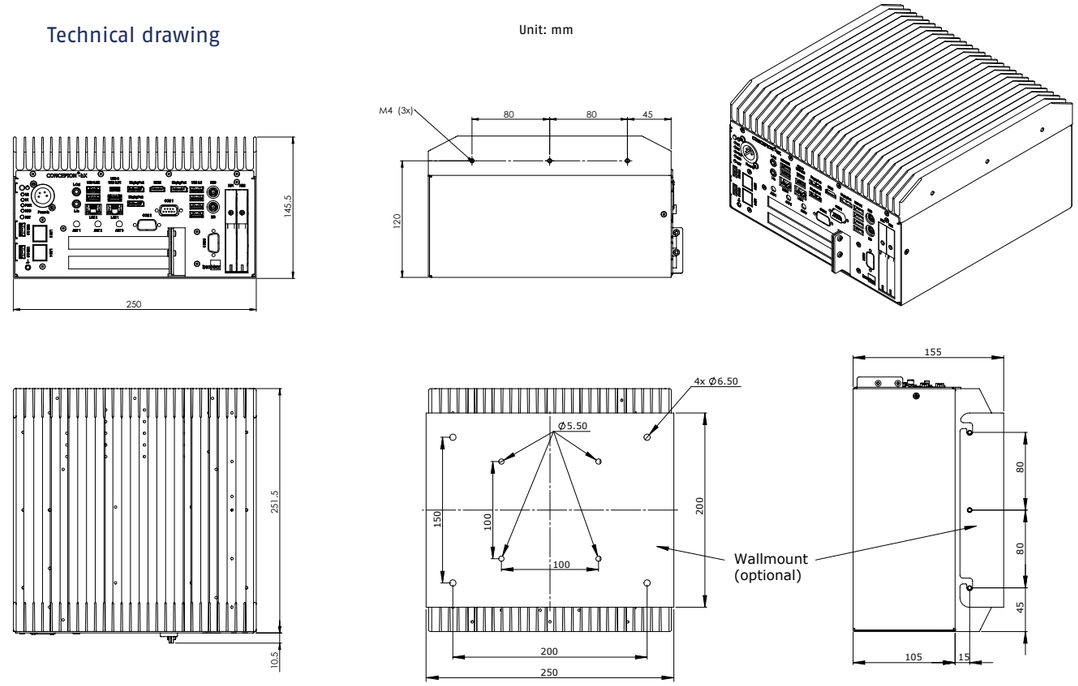

InoNet Competences and Services

Consulting | *Development* | *Testing* | *Customization* | *Manufacturing* | *Certifications*

ISO 9001

InoNet Computer GmbH
Wettersteinstraße 18
82024 Taufkirchen, Germany
www.inonet.com

www.inonet.com | Tel.: +49 89 / 666 096 - 0 | sales@inonet.com

Published: 13. May 2024, 08:40. Subject to be change without prior notice.

Automotive
IN-VEHICLE

INONET
A EUROTECH COMPANY

Concepion®-tXfa-v3-L-R680E

Compact system for automotive use with Intel® Core™ i CPUs up to 14th Generation and AI support

Features

- *High-Performance with Intel® Core™ i CPUs 12th/13th/14th Generation*
- *High performance GPU included (VPU and FPGA on request)*
- *Optional Wi-Fi/Bluetooth/ GNSS/LTE (5G on request)*
- *Optional QuickTray® extension for large storage*
- *Additional expansions for Ethernet, CAN, LIN®, etc. optional*
- *Perfect for In-vehicle applications (Ignition Support, Deep Sleep Mode, etc.)*



Configuration example

*Further configurations on request!**

Mainboard:
Industrial Mainboard (mini-ITX), 24/7 operation, long-term available

Processor:
Intel® Core™ i 12th/13th/14th Generation up to 65 Watt TDP, Socket 1700
Chipset: Intel® R680E
Intel® Turbo-Boost: Depends on the selected configuration

Memory:
2x DDR5 SO-DIMM, max. 5600 MHz
max. 64 GB

Graphic:
Onboard Intel® UHD 730/770 (depending on CPU)
AI
NVIDIA® L4 Tensor Core GPU with dedicated cooling
RT Cores, 24 GB GDDR6, PCIe x8

Drive Bays:
Internal
2x M.2 (M-key, type: 2280)
External
2x 2.5" SATA-III SSD in shuttle

I/O:
Back
2x 2.5 GBit LAN (RJ45), iAMT support
2x 10 GBit LAN (RJ45), PCIe x4 (Gen 3)
2x Display Port 1.4a
1x RS-232
1x RS-232/422/485
6x USB 3.2 (2x Gen 2, 4x Gen 1)
2x USB 2.0
3x Audio (Line-In, Line-Out, Mic)
Internal
1x LVDS / eDP
1x GPIO Header (8 Bit)

Features:
Watchdog Timer, iAMT, TPM 2.0

Power Supply:
11 ~ 30 VDC, 250/300 Watt
NL4 connector (Neutrik), four-pin with ignition pin
Efficiency >94% @ 50% load
Optional
12 ~ 48 VDC, 500/600 Watt

Mechanical:
Chassis
Robust 1 mm galvanized sheet steel with powder coating
(On request: Intrusion Detection)
Dimensions (W x H x D)
215 x 131 x 303 mm
Cooling
Active, 2x 80 mm fans
Filter cartridge incl. mat
Mounting
Wallmount, Desktop, 19" compatible
(On request: two systems side by side)

Communication:
Wi-Fi/Bluetooth (optional)
Intel® M.2 Module
802.11ax Dual Band 2x2 160MHz
Bluetooth® 5.1
GNSS/LTE (optional)
Support for GPS, GLONASS, BeiDou, Galileo, QZSS, Micro SIM slot for 3G/4G (On request: 5G with additional antennas)

Environment:
Operating Temperature
0° ~ 55° C
Storage Temperature
-20° ~ 70° C
Relative Humidity (operation)
10 ~ 90 % (non condensing)
IP Protection
IP20

Operating System:
Microsoft® Windows® 10/11, Linux®

** The final configuration must take care of the power and cooling capacity of the power supply and the system fans.*

Published: 11. December 2024, 08:54. Subject to be change without prior notice.

Automotive
IN-VEHICLE

INONET
A EUROTECH COMPANY

Concepion®-tXfa-v3-L-R680E

Additional illustrations



Optional with Wi-Fi/Bluetooth and GNSS/LTE



Technical drawing

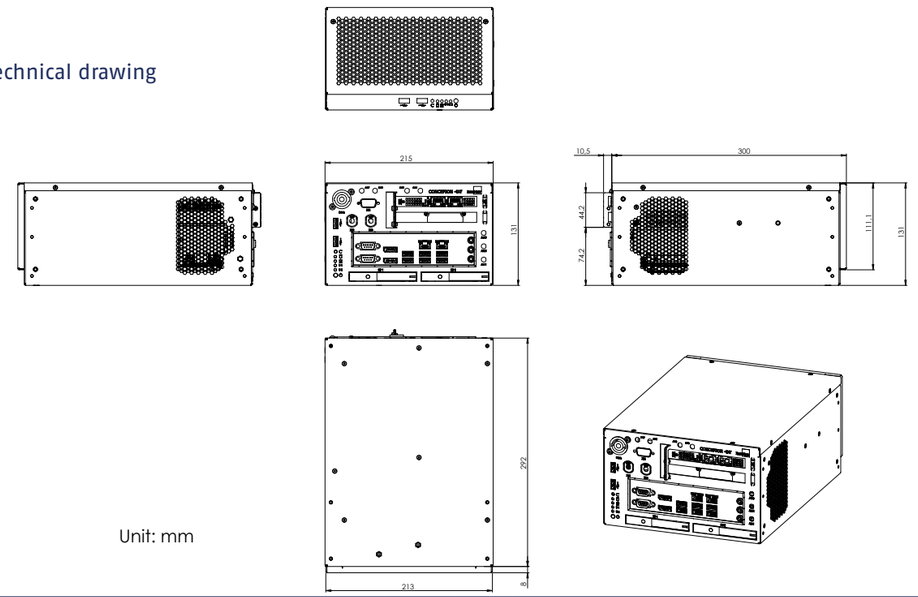

Unit: mm

InoNet Competences and Services

Consulting | *Development* | *Testing* | *Customization* | *Manufacturing* | *Certifications*

ISO 9001

InoNet Computer GmbH
Wettersteinstraße 18
82024 Taufkirchen, Germany
www.inonet.com

www.inonet.com | Tel.: +49 89 / 666 096 - 0 | sales@inonet.com

Published: 11. December 2024, 08:54. Subject to be change without prior notice.

Intel® Core™ i | LAN / WiFi / BT / Mobile / GPS | 2x Bay / 2x M.2 | 2x PCIe

INONET
A EUROTECH COMPANY

Concepion®-tXf-L-v3 - 10. Gen.

Compact, actively cooled system for edge intelligence and automotive environments. Optional AI support.

Features

- *High-Performance with Intel® Core™ i CPUs 10th Generation*
- *Optional High performance GPU (VPU and FPGA on request)*
- *Edge Intelligence Gateway*
- *Optional Wi-Fi/Bluetooth/GNSS/ LTE, on request 5G*
- *Robust full-industrial components for 24/7 operation*
- *Also suitable for in-vehicle applications*
- *Ubuntu Certified*

Ubuntu Certified



Configuration example

*Further configurations on request!**

Mainboard:
Industrial Mainboard (mini-ITX), 24/7 operation, long-term available

Processor:
Intel® Core™ i 10th Generation
Chipset: Intel® W480E
Intel® Turbo-Boost: Depends on the selected configuration

Memory:
2x DDR4 SO-DIMM, max. 64 GB

Graphic:
Onboard Intel® UHD 630
KI (optional)
NVIDIA® A2 TENSOR CORE GPU with dedicated cooling
10 RT Cores, 16GB GDDR6, PCIe x8
(On request: NVIDIA® L4 Tensor Core)

Drive Bays:
Internal
1x M.2 (M-key, type: 2280)
External
2x 2.5" SATA-III SSD in shuttle

I/O:
Back
2x 1 GBit LAN (RJ45)
2x 1 GBit LAN (M12) (on request)
2x 10GBit LAN (RJ45) (optional)
1x DisplayPort 1.2
1x DVI-D
1x HDMI 1.4b
2x RS-232/422/485
1x RS-232/422/485 (optional)
6x USB 3.2 (Gen 1)
2x USB 2.0
3x Audio (Line-In, Line-Out, Mic)
Internal
1x LVDS / eDP
1x GPIO Header (8 Bit)

Operating System:
Microsoft® Windows® 10/11
Linux® Ubuntu

The Ubuntu certification also includes these options.

Power Supply:
11 ~ 30 VDC, 250/300 Watt
NL4 connector (Neutrik), four-pin with ignition pin
Efficiency >94% @ 50% load
Optional
16 ~ 30 VDC, 400 Watt

Expansions:
2x PCIe x8 (mech. x16)
(The max. power loss must not exceed 50 Watt.)
1x M.2 (E-key, type: 2230)

Mechanical:
Chassis
Robust 1 mm galvanized sheet steel with powder coating
(On request: Intrusion Detection)
Dimensions (W x H x D)
215 x 131 x 303 mm
Cooling
Active, 2x 80 mm fans
Filter cartridge incl. mat
Mounting
Wallmount, Desktop, 19" compatible
(On request: two systems side by side)

Communication:
Wi-Fi/Bluetooth (optional)
Intel® M.2 Module, 802.11ax Dual Band 2x2 160MHz, Bluetooth® 5.1
GNSS/LTE (optional)
Support for GPS, GLONASS, BeiDou, Galileo, QZSS
Micro SIM slot for 3G/4G
(On request: 5G with additional antennas)

Environment:
Operating Temperature
0° ~ 55° C
Storage Temperature
-20° ~ 70° C
Relative Humidity (operation)
10 ~ 90 % (non condensing)
IP Protection
IP20

** Depending on the performance and cooling capacity of the power supply unit and the system fans.*

Published: 10. December 2024, 16:10. Subject to be change without prior notice.

INONET
A EUROTECH COMPANY

Concepion®-tXf-L-v3 - 10. Gen.

Additional illustrations



Filter cartridge with filter mat

Optional with Wi-Fi/Bluetooth and GNSS/LTE



Technical drawing

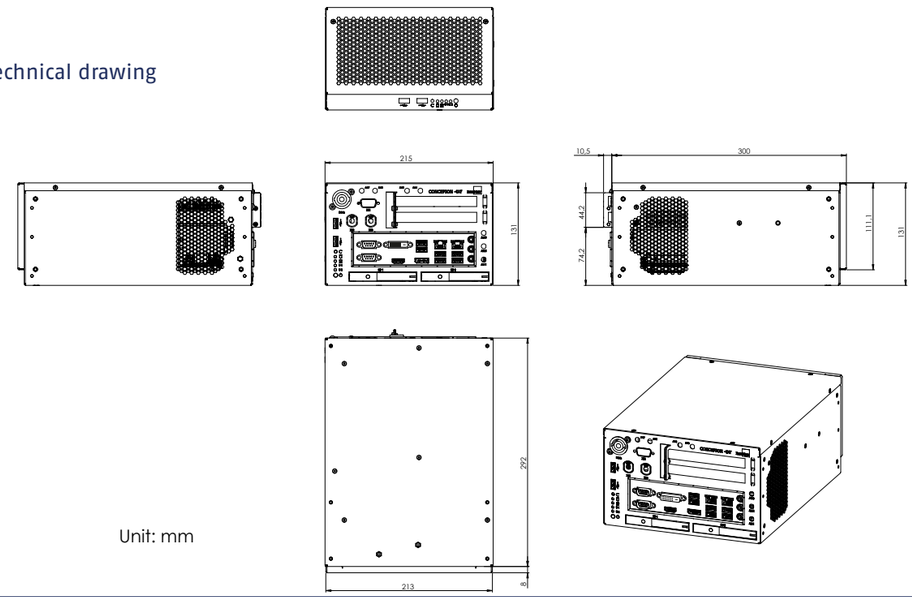

Unit: mm

InoNet Competences and Services

Consulting | *Development* | *Testing* | *Customization* | *Manufacturing* | *Certifications*

UL CE ISO 9001

InoNet Computer GmbH
Wettersteinstraße 18
82024 Taufkirchen, Germany
www.inonet.com

www.inonet.com | Tel.: +49 89 / 666 096 - 0 | sales@inonet.com

Published: 10. December 2024, 16:10. Subject to be change without prior notice.

Intel® Core™ i | LAN / WiFi / BT / Mobile / GPS | 2x Bay / 2x M.2

INONET
A EUROTECH COMPANY

Concepion®-tXf-L-v3 - 12. Gen.

Compact, actively cooled system for use in edge intelligence and automotive environments with AI support

Features

- *High-Performance with Intel® Core™ i CPUs 12th Generation*
- *High performance GPU included (VPU and FPGA on request)*
- *Edge Intelligence Gateway*
- *Optional Wi-Fi/Bluetooth/GNSS/LTE, on request 5G*
- *Special cooling concept*
- *Robust full-industrial components for 24/7 operation*
- *Two additional 2.5“ shuttles*
- *Perfect for In-vehicle applications*



Configuration example

*Further configurations on request!**

Mainboard:
Industrial Mainboard (mini-ITX), 24/7 operation, long-term available

Processor:
Intel® Core™ i 12th Generation
up to 65 Watt TDP, Socket 1700
(On request: 13th Generation)**
Chipset: Intel® Q670E
Intel® Turbo-Boost: Depends on the selected configuration

Memory:
2x DDR5 SO-DIMM, max. 4800 MHz
max. 64 GB

Graphic:
Onboard Intel® UHD 730/770
(depending on CPU)
KI
NVIDIA® A2 TENSOR CORE GPU with dedicated cooling
10 RT Cores, 16GB GDDR6, PCIe x8
(On request: NVIDIA® L4 Tensor Core GPU)**

Drive Bays:
Internal
1x M.2 (M-key, type: 2242/2260/2280)
1x USB 3.2 (Gen 1)
External
2x 2.5“ SATA-III SSD in shuttle

I/O:
Back
1x 1 GBit LAN (RJ45)
1x 2.5 GBit LAN (RJ45), vPro support
2x 10 GBit LAN (RJ45), PCIe x4 (Gen 3)
1x HDMI
3x Display Port 1.4 (up to 8k)
1x RS-232/422/485
1x RS-232/422/485 (optional)
1x USB-C 3.2 (Gen 2)
3x USB 3.2 (2x Gen 2, 1x Gen 1)
6x USB 2.0
2x PS/2 (mouse and keyboard)
2x Audio (line-in, line-out)
Internal
1x LVDS / eDP
1x GPIO Header (8 Bit)

Power Supply:
11 ~ 30 VDC, 250/300 Watt
NL4 connector (Neutrik), four-pin with ignition pin
Efficiency >94% @ 50% load
Optional
16 ~ 30 VDC, 400 Watt

Mechanical:
Chassis
Robust 1 mm galvanized sheet steel with powder coating
(On request: Intrusion Detection)**
Dimensions (W x H x D)
215 x 131 x 303 mm
Cooling
Active, 2x 80 mm fans
Filter cartridge incl. mat
Mounting
Wallmount, Desktop, 19“ compatible
(On request: two systems side by side)

Communication:
Wi-Fi/Bluetooth (optional)
Intel® M.2 Module
802.11ax Dual Band 2x2 160MHz
Bluetooth® 5.1
GNSS/LTE (optional)
Support for GPS, GLONASS, BeiDou, Galileo, QZSS
Micro SIM slot for 3G/4G
(On request: 5G with additional antennas)**

Environment:
Operating Temperature
0° ~ 55° C
Storage Temperature
-20° ~ 70° C
Relative Humidity (operation)
10 ~ 90 % (non condensing)
IP Protection
IP20

Operating System:
Microsoft® Windows® 10/11, Linux®

** The final configuration must take care of the power and cooling capacity of the power supply and the system fans.*

*** New feature after redesign*

Published: 10. December 2024, 16:14. Subject to be change without prior notice.

INONET
A EUROTECH COMPANY

Concepion®-tXf-L-v3 - 12. Gen.

Additional illustrations



Filter cartridge with filter mat

Optional with Wi-Fi/Bluetooth and GNSS/LTE



Technical drawing

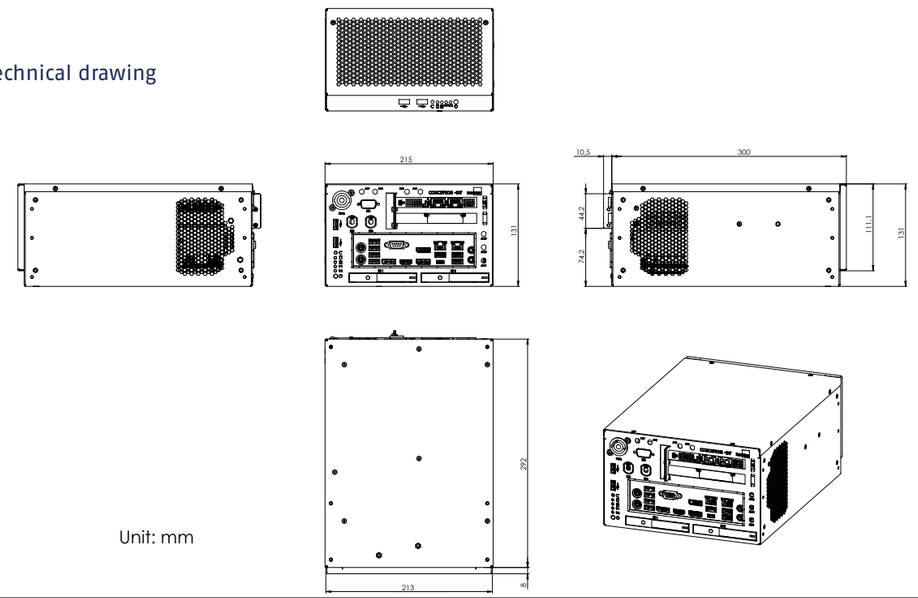

Unit: mm

InoNet Competences and Services

Consulting | *Development* | *Testing* | *Customization* | *Manufacturing* | *Certifications*

ISO 9001

InoNet Computer GmbH
Wettersteinstraße 18
82024 Taufkirchen, Germany
www.inonet.com

www.inonet.com | Tel.: +49 89 / 666 096 - 0 | sales@inonet.com

Published: 10. December 2024, 16:14. Subject to be change without prior notice.

INONET
A EUROTECH COMPANY

Mayflower®-B17

Modular Automotive Embedded Computer Platform with Server Performance for Data Logging and AI Applications

Features

- ↗ *Single/Dual Intel® XEON® CPU or Intel® Core™ i CPU*
- ↗ *Server I/O Performance (Processing and Logging Rates)*
- ↗ *Perfect for AI Applications due to powerful GPUs*
- ↗ *Extendable by 6x PCIe Slots (upgradeable up to 7x)*
- ↗ *Application-specific Cooling Options*
- ↗ *Expandable through InoNet QuickTray®*

Configuration example

Further configurations on request!

Mainboard:
Industrial server mainboard, 24/7 operation, long-term availability

Processor:
Intel® XEON® Scalable processors
Intel® Core™ i 10th Generation

Graphics:
Onboard graphics chip
Optional
Professional NVIDIA® graphics cards (TITAN v or GeForce RTX 2080Ti)

Memory:
DDR4 2666 MHz RDIMM or LDIMM
Up to 1.5 TB****

Storage:
2x 2.5" SATA
2x 2.5" NVMe or SATA in shuttle
Optional QuickTray®
Extension with up to 2x QuickTray®. Per QuickTray® up to 14 GB/s** (2x QuickTray® up to 26 GB/s**) and 120 TB* with 4x NVMe SSDs

Expansions*:
5x PCIe x16 (Gen 3)
1x PCIe x8 (Gen 3)
Optional
Additional extensions for automotive applications (Ethernet, CAN, LIN® etc.)

Power Supply:
650 - 1100W
(depending on configuration)
Input Voltage
(with engine running)
12 VDC (±9 VDC ~ ±18 VDC) /
24 VDC (±18 V ~ ±36 V DC) /
48 VDC (±37 V ~ ±71 V DC) /
94 ~ 264 VAC

Mechnical:
Dimensions (W x H x D)
431 x 177 x 417 mm
QuickTray® extension:
430 x 115 x 417 mm (2x QuickTray®)
Cooling
Active, liquid cooling
Fans: 2x 120 mm in Chassis

Environment:
Operating Temperature
-5 ~ 55° C***
Storage Temperature
-20 ~ 70° C
Relative Humidity
10 ~ 90% (non-condensing)
IP Protection
IP20

* Depending on selected mainboard
** Depending on SSD type and manufacturer, real measured with Iometer (continuous write mode)
*** with two Intel® XEON® Gold 6148 CPUs and NVIDIA® GeForce RTX 2080Ti
**** Depending on selected cooling solution



Air cooled version

Published: 24. January 2023, 16:50. Subject to be change without prior notice.

INONET
A EUROTECH COMPANY

Mayflower®-B17

Additional illustrations



Optional extension with 2x QuickTray®

Liquid cooled version

Up to 14 GB/s* each QuickTray® (2x QuickTray® up to 26 GB/s*) and 120 TB* with 4x NVMe SSDs



Backside

* Depending on SSD type and manufacturer, real measured with Iometer (continuous write mode)

InoNet Automotive Ecosystem

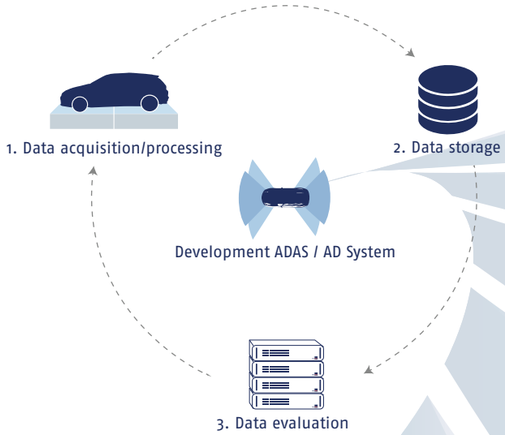

The InoNet Automotive Computer Ecosystem describes the entire spectrum of scalable hardware solutions for vehicle development - especially in the field of ADAS and AD and their subsequent testing.

Our product portfolio covers all categories, from data acquisition and processing in the vehicle to fast and secure storage on exchangeable data storage devices to subsequent data evaluation via server farms or workstations.

InoNet Computer GmbH
Wettersteinstraße 18
82024 Taufkirchen, Germany
www.inonet.com

www.inonet.com | Tel.: +49 89 / 666 096 - 0 | sales@inonet.com

Published: 24. January 2023, 16:50. Subject to be change without prior notice.

INONET
A EUROTECH COMPANY

Mayflower®-B17-LiQuid vE

Liquid cooled in-vehicle server for AI/GPU and Sensor Fusion Applications

Features

- ↗ *High computing power due to powerful CPUs and up to 5x Tensor cards*
- ↗ *Liquid cooling for CPU and Tensor cards*
- ↗ *Optimized for AI applications through powerful GPUs*
- ↗ *Robust full industrial compo-nents for 24/7 operation*
- ↗ *Expandable through 7 PCIe x16 slots and InoNet QuickTray®*



Configuration example

Further configurations on request!

Mainboard:
Industrial Mainboard (ATX), 24/7 operation, long-term availability

Processor:
AMD® EPYC™ 7003/7002
Liquid cooled

Memory:
8x DDR4 DIMM, max. 3200 MHz
RDIMM/LRDIMM: max. 128 GB/DIMM

AI Support:
Up to 5x Tensor cards, PCIe x16
Liquid cooled

I/O:
2x 10GBit LAN (RJ45)
4x 10GBit LAN (RJ45), PCIe x8 card
1x Dedicated IPMI LAN (RJ45)
1x RS-232
2x USB 3.2 (Gen 1)
1x USB-C 3.2 (Gen 2)
2x DisplayPort (optional)
1x VGA

Drive Bays:
Internal
1x 2.5", 2x M.2 (one M.2 slot de-pending on slot configuration)
External
2x 2.5" removable frame
Optional QuickTray®
Extension with up to 2x QuickTray®. Per QuickTray® up to 14 GB/s* (2x QuickTray® up to 28 GB/s*) and 120 TB* with 4x NVMe SSDs

Graphic:
OnBoard AST2500, 512 MB DDR4
Optional
NVIDIA® T400, 2 GB GDDR6, 2x DP

Certifications:
CE (93/68/EWG), EMV (2014/30/EU)
Low voltage safety (2014/35/EU)

Power Supply:
9 ~ 18 VDC / 1000 Watt
Screw terminals for ring eyelets
Optionally 24/48 VDC or AC

Expansions:
7x PCIe x16 (Gen 4), full height
One slot of it optional
- PCIe x16 (Gen 4)
- PCIe x8 (Gen 4), second M.2
- no PCIe, second M.2, 2x OCuLink

Optional
Additional extensions for automotive applications (Ethernet, CAN, LIN® etc.)

Mechanical:
Chassis
19 Zoll 4HE Rackmount-Chassis
Dimensions (W x H x D)
430 x 175 x 400 mm
QuickTray® extension:
430 x 115 x 417 mm (2x QuickTray®)
Cooling
Hybrid cooling system with 2x 120mm fans and liquid cooling for CPU and up to 5 Tensor cards
Remote condenser with 4x 120mm fans

Environment:
Operating Temperature
0° ~ 55° C**
Storage Temperature
-20° ~ 70° C
Relative Humidity
10 ~ 90 % (non condensing)
IP Protection
IP20

Operating System:
Microsoft® Windows® 10 (limited)
Microsoft® Windows® Server, Linux®

* Depending on SSD type and manufacturer, real measured with Iometer (continuous write mode)
** In full expansion at full load (24/7): 0° ~ 40° C

Published: 29. June 2023, 11:51. Subject to be change without prior notice.

INONET
A EUROTECH COMPANY

Mayflower®-B17-LiQuid vE

Additional illustrations

Remote condenser with 4x 120mm fans for liquid cooling



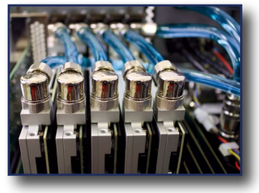

Up to 5x Tensor cards
PCIe x16
Liquid cooled

Optional extension with up to 2x QuickTray®



Up to 14 GB/s* each QuickTray® (2x QuickTray® up to 28 GB/s*) and 120 TB* with 4x NVMe SSDs

* Depending on SSD type and manufacturer, real measured with Iometer (continuous write mode)

InoNet Automotive Ecosystem

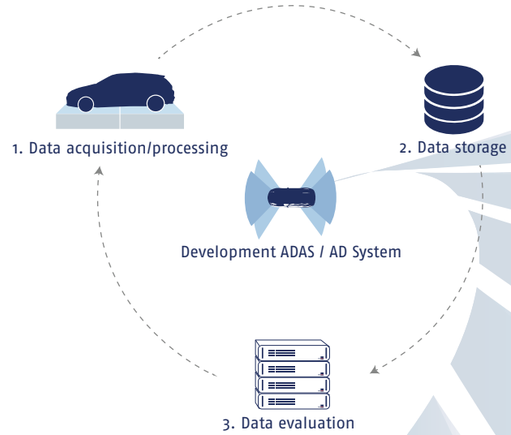

The InoNet Automotive Computer Ecosystem describes the entire spectrum of scalable hardware solutions for vehicle development – especially in the field of ADAS and AD and their subsequent testing.

Our product portfolio covers all categories, from data acquisition and processing in the vehicle to fast and secure storage on exchangeable data storage devices to subsequent data evaluation via server farms or workstations.

InoNet Computer GmbH
Wettersteinstraße 18
82024 Taufkirchen, Germany
www.inonet.com

www.inonet.com | Tel.: +49 89 / 666 096 - 0 | sales@inonet.com

Published: 29. June 2023, 11:51. Subject to be change without prior notice.

INONET
A EUROTECH COMPANY

Mayflower®-B17-LiQuid-vX

Liquid cooled in-vehicle server for AI/GPU and Sensor Fusion Applications

Features

- ↗ *High computing power due to powerful CPUs and up to 5x GPU/Tensor cards*
- ↗ *Liquid cooling for CPU and GPU/Tensor cards*
- ↗ *Optimal for AI applications through powerful GPUs*
- ↗ *Robust full industrial compo-nents for 24/7 operation*
- ↗ *Expandable through 6 PCIe slots and InoNet QuickTray®*



Configuration example

Further configurations on request!

Mainboard:
Industrial Mainboard E-(ATX), 24/7 operation, long-term availability
Chipset: Intel® C621A

Processor:
Dual Intel® XEON® Scalable (3rd Gen)
Liquid cooled

Memory:
16x DDR4 DIMM, max. 3200 MHz
RDIMM/LRDIMM, max. 256 GB/DIMM

AI Support:
Up to 5x GPU/Tensor cards
PCIe x16/x8, Liquid cooled

I/O:
Back
2x 1GBit LAN (RJ45)
4x 10GBit LAN (RJ45), PCIe x8 card
1x Dedicated IPMI LAN (RJ45)
1x RS-232
4x USB 3.2 (Gen 1)
1x VGA
1x UID LED/BMC Reset

Drive Bays:
Internal
1x M.2
External
2x 5.25"
Optional QuickTray®
1x integrated (uses 2x 5.25")
Extension with up to 2x QuickTray®.
Per QuickTray® up to 14 GB/s* (2x QuickTray® up to 28 GB/s*) and 120 TB* with 4x NVMe SSDs

Graphic:
OnBoard AST2600
Optional
NVIDIA® T600, 4 GB GDDR6, 4x mDP

Power Supply:
9 ~ 18 VDC / 1000 Watt
Screw terminals for ring eyelets
Optionally 24/48 VDC or AC

Expansions:
4x PCIe x16 (Gen 4)
2x PCIe x8 (Gen 4)
full height
Optional
Additional extensions for automotive applications (Ethernet, CAN, LIN® etc.)

Mechanical:
Chassis
19 Zoll 4HE Rackmount-Chassis
Dimensions (W x H x D)
430 x 177 x 401 mm
QuickTray® extension:
430 x 115 x 417 mm (2x QuickTray®)
Cooling
Hybrid cooling system with 2x 120mm fans and liquid cooling for CPU and up to 5 Tensor cards
Remote radiator with 2x 120mm fans

Environment:
Operating Temperature
-20° ~ 70° C**
Storage Temperature
-20° ~ 70° C
Relative Humidity
10 ~ 90 % (non condensing)
IP Protection
IP20

Certifications:
CE (93/68/EWG)
EMV (2014/30/EU)
Low voltage safety (2014/35/EU)

Operating System:
Microsoft® Windows® 10/11/Server
Linux®

* Depending on SSD type and manufacturer, real measured with Iometer (continuous write mode)
** With external radiator (25° C), in full expansion at full load (24/7): 0° ~ 40° C

Published: 29. June 2023, 11:51. Subject to be change without prior notice.

INONET
A EUROTECH COMPANY

Mayflower®-B17-LiQuid-vX

Additional illustrations

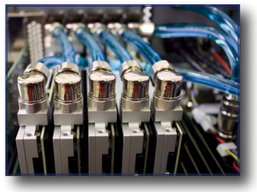

Up to 5x Tensor cards
PCIe x16/x8
Liquid cooled



Remote radiator with 2x 120mm fans for liquid cooling



Optional extension with up to 2x QuickTray®

Up to 14 GB/s* each QuickTray® (2x QuickTray® up to 28 GB/s*) and 120 TB* with 4x NVMe SSDs

* Depending on SSD type and manufacturer, real measured with Iometer (continuous write mode)

InoNet Automotive Ecosystem

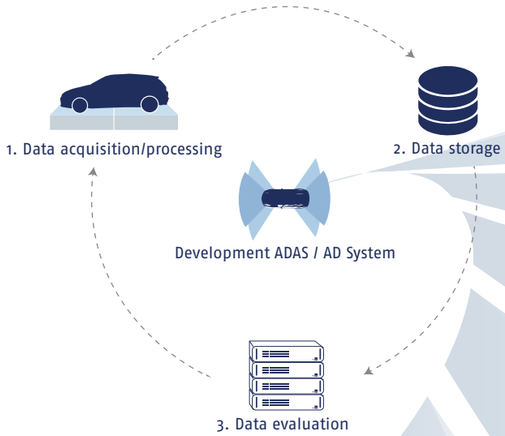

The InoNet Automotive Computer Ecosystem describes the entire spectrum of scalable hardware solutions for vehicle development – especially in the field of ADAS and AD and their subsequent testing.

Our product portfolio covers all categories, from data acquisition and processing in the vehicle to fast and secure storage on exchangeable data storage devices to subsequent data evaluation via server farms or workstations.

InoNet Computer GmbH
Wettersteinstraße 18
82024 Taufkirchen, Germany
www.inonet.com

www.inonet.com | Tel.: +49 89 / 666 096 - 0 | sales@inonet.com

Published: 29. June 2023, 11:51. Subject to be change without prior notice.

Automotive
IN-VEHICLE

INONET
A EUROTECH COMPANY

Mayflower®-Q5aW-SP6

Compact high performance industrial PC for smart data processing in vehicles, including QuickTray® v3

Features

- *High-Performance with AMD® EPYC™ 8004 series CPUs*
- *Liquid cooling for the CPU and add-on cards*
- *Expandable to up to 20 LAN ports via 4 PCIe slots*
- *Less power consumption than a standard car HPC*
- *Horizontal or vertical mounting possible*
- *Full-industrial components for 24/7 operation*

Configuration example

Further configurations on request!

Mainboard:
Industrial Mainboard (ATX), 24/7 operation, long-term availability

Processor:
AMD® EPYC™ 8004 series
Socket SP6
Liquid cooled

Memory:
8x DDR5 RDIMM, max. 768 GB

Graphic:
Onboard AST2600, 512 MB DDR4

I/O:
Back
2x 10 GBit LAN (RJ45)
2x 1 GBit LAN (RJ45)
1x dedicated IPMI (RJ45)
2x USB 3.2 (Gen 1)
1x VGA
1x UID button
Back (optional)
4x 10 GBit LAN (RJ45) via PCIe card
4x 25 GBit LAN (RJ45) via PCIe card
Front
2x USB 3.2 (Gen 1)

Features:
Watchdog Timer
TPM support

Operating System:
Microsoft® Windows® Server, Linux®

Power Supply:
9 ~ 18 VDC, 500/550 Watt, PS2
AC power supply optional

Drive Bays:
Internal
2x M.2 (M-key, type: 22110/2280)
2x 2.5“
External
3X 5.25“
(2 of them used by QuickTray®-v3)
QuickTray®-v3
up to 26 GB/s* and 240 TB*
with 4x NVMe SSDs
via RAID controller (PCIe x16)

Expansions:
4x PCIe x16 (Gen 5)
(1x used by RAID controller)
1x PCIe x8 (Gen 5)
full height

Mechanical:
Chassis
Industrial case made of
1 mm heavy duty steel plate
Horizontal or vertical mounting
Dimensions (W x H x D)
330 x 196 x 410 mm
Cooling
Hybrid cooling system with 120 mm fan and liquid cooling for CPU and add-on cards

Environment:
Operating Temperature
0° ~ 50° C**
Storage Temperature
-20° ~ 70° C
Relative Humidity
10 ~ 90 % (non condensing)
IP Protection
IP20



* Depending on SSD type and manufacturer, real measured with Iometer (continuous write mode)

** In full expansion at full load (24/7): 0° ~ 40° C

Published: 20. May 2026, 09:42. Subject to be change without prior notice.

Automotive
IN-VEHICLE

INONET
A EUROTECH COMPANY

Mayflower®-Q5aW-SP6

Additional illustrations



Horizontal or vertical mounting possible



Rear view
(with optional LAN cards and mounting rails)



Mounting rails

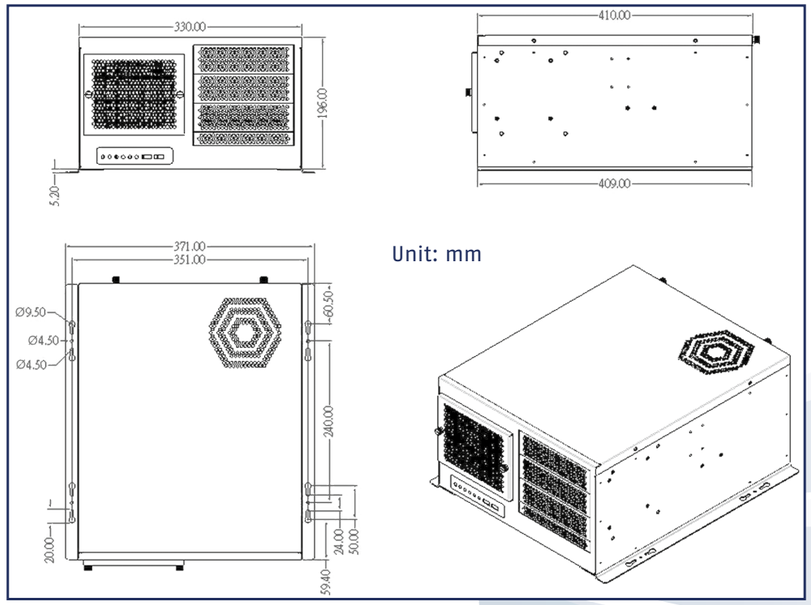

Unit: mm

Technische Zeichnung
(without built-in QuickTray®-v3)

InoNet Competences and Services

Consulting | *Development* | *Testing* | *Customization* | *Manufacturing* | *Certifications* (ISO 9001)

InoNet Computer GmbH
Wettersteinstraße 18
82024 Taufkirchen, Germany
www.inonet.com

www.inonet.com | Tel.: +49 89 / 666 096 - 0 | sales@inonet.com

Published: 20. May 2026, 09:42. Subject to be change without prior notice.

INONET
A EUROTECH COMPANY

Mayflower®-Q12aW-SP5

Liquid cooled, multi-PCIe data logger for in-vehicle use and AI/GPU and sensor fusion applications with up to 12 PCIe slots

Features

- AI support thanks to multi-GPU support and high-performance CPU
- Liquid cooling for CPU and GPU/sensor/network cards
- Robust full industrial components for in-vehicle operation
- Up to 12 PCIe slots of the 5th generation
- Encryption support
- Up to 3x InoNet QuickTray®-v3



Configuration example

Further configurations on request!

Mainboard:
Industrial Mainboard, 24/7 operation, long-term availability

Processor:
AMD® EPYC™ 9004/97x4
Socket SP5
Liquid cooled

Memory:
8x DDR5 DIMM, max. 4800 MHz
RDIMM, max. 4 TB

AI Support:
Multi-GPU support
Liquid cooled, PCIe x8/x16

Graphic:
OnBoard AST2600, 512 MB DDR4
Optional
NVIDIA® T600, 4 GB GDDR6, 4x mDP

I/O:
Back
2x 1 GBit LAN (RJ45)
2x 10 GBit LAN (RJ45)
4x 10 GBit LAN (RJ45) optional
1x Dedicated IPMI LAN (RJ45)
2x USB 3.2 (Gen 1)
1x VGA
1x UID button with LED

Drive Bays:
Internal
1x M.2 (M-key, Type: 2280)
1x M.2 (M-key, Type: 22110/2280)
External
2x 5.25“
QuickTray®-v3
1x integrated (2x 5.25“ required)
Extension
Optional up to 2x QuickTray®-v3
Up to 26 GB/s* per QuickTray®-v3
(2x QT up to 28 GB/s*) and
240 TB* with 4x NVMe SSDs

Power Supply:
9 ~ 18 VDC / 1100 Watt
24/48 VDC or AC optional

Expansions:
4x PCIe x16 (Gen 5)
2x PCIe x8 (Gen 5)
full height
Extension
6x PCIe (Gen 5) slots with 40 lanes
Can be divided into PCIe x16 and PCIe x8 as required
Optional
Additional extensions for automotive applications (Ethernet, CAN, LIN® etc.)

Mechanical:
Chassis
19 Zoll 4HE Rackmount-Chassis
Dimensions chassis (W x H x D)
430 x 177 x 401 mm
Dimensions extension (W x H x D)
430 x 115 x 401 mm
Cooling
Hybrid cooling system with 2x 120 mm fans and liquid cooling for CPU and up to 5 PCIe cards
Remote radiator with 2x 120 mm fans

Environment:
Operating Temperature
-20° ~ 70° C**
Storage Temperature
-20° ~ 70° C
Relative Humidity
10 ~ 90 % (non condensing)
IP Protection
IP20

Operating System:
Microsoft® Windows® Server
Linux®

* Depending on SSD type and manufacturer, real measured with Iometer (continuous write mode)

** With external radiator (25° C), in full expansion at full load (24/7): 0° ~ 40° C

Published: 10. June 2024, 11:31. Subject to be change without prior notice.

INONET
A EUROTECH COMPANY

Mayflower®-Q12aW-SP5

Additional illustrations

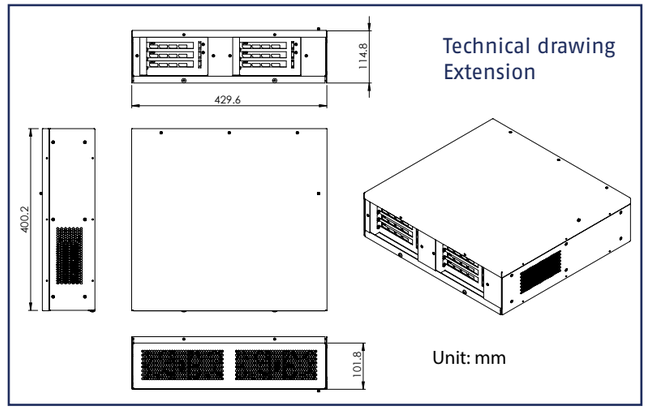



Remote radiator with 2x 120 mm fans for liquid cooling

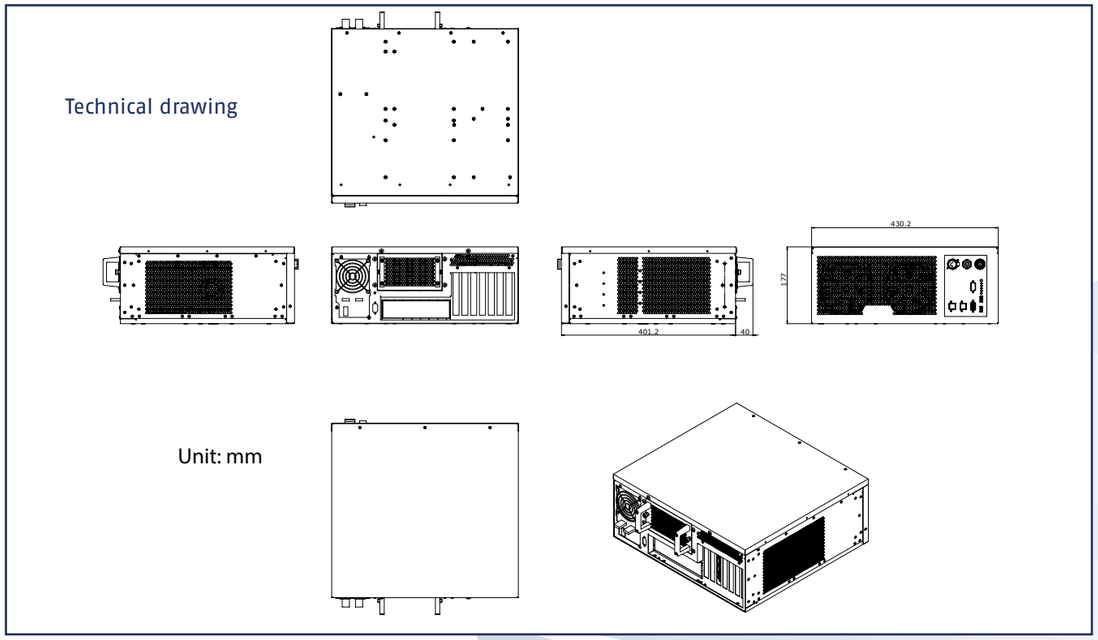

InoNet Competences and Services

Consulting | *Development* | *Testing* | *Customization* | *Manufacturing* | *Certifications*

InoNet Computer GmbH
Wettersteinstraße 18
82024 Taufkirchen, Germany
www.inonet.com

www.inonet.com | Tel.: +49 89 / 666 096 - 0 | sales@inonet.com

Published: 10. June 2024, 11:31. Subject to be change without prior notice.

INONET
A EUROTECH COMPANY

InoBay™-2U

Rugged 2U Storage Extender for in-vehicle use

The InoBay™-2U storage extender is a 2U storage extension that can be connected to any PCIe system with a corresponding host-card (e.g. from Dolphin or OSS) via a copper cable. Thanks to its **universal compatibility with third-party systems**, customers benefit from maximum flexibility and a holistic, sustainable test infrastructure without additional investment costs.

Features

- *Universally connectable to existing systems*
- *Designed for in-vehicle use*
- *Remote Power/Reset*
- *QuickTray®-v3:*
  - *Storage capacity up to 240 TB**
  - *Write rate up to 26 GigaByte/s**

Configuration example

Further configurations on request!

Backplane:
2-slot PCIe x16 (Gen 4)

Target-Card:
PCIe x16 (Gen 4)
4x external PCIe x4 ports (SFF-8644) for copper cables (fiber optic on request)
Speed: 64 Gbit/s per port, total 256 Gbit/s

Host-Card:
any compatible card with SFF-8644 ports

Remote Power/Reset:
via M12 connector

Data Storage:
1x QuickTray®-v3 connected via PCIe x16 (Gen 4) RAID controller
Storage capacity: up to 240 TB*
Write rate: 26 GBps / 208 Gbit/s*

* Depending on SSD type and manufacturer, real measured with Iometer (continuous write mode)

Power Supply:
6 ~ 30 VDC, 250 Watt
NL4 connector (Neutrik) four-pin with ignition pin

Mechanical:
Chassis
19 inch 2U rackmount chassis
Dimensions (W x H x D)
423,9 x 88 x 400 mm
Cooling
Active, 1x 80 mm fan

Environment:
Operating Temperature
-20° ~ 55° C
Storage Temperature
-20° ~ 80° C
Relative Humidity (operation)
10 ~ 90 % (nicht kondensierend)
Shock
10 G (11 ms)
Vibration
1 G (5 - 500 Hz)
Noise Level
~ 55 db (incl. QuickTray®-v3)



Fig. incl. QuickTray®-v3

Published: 11. August 2025, 10:40. Subject to be change without prior notice.

INONET
A EUROTECH COMPANY

InoBay™-2U

Additional illustrations

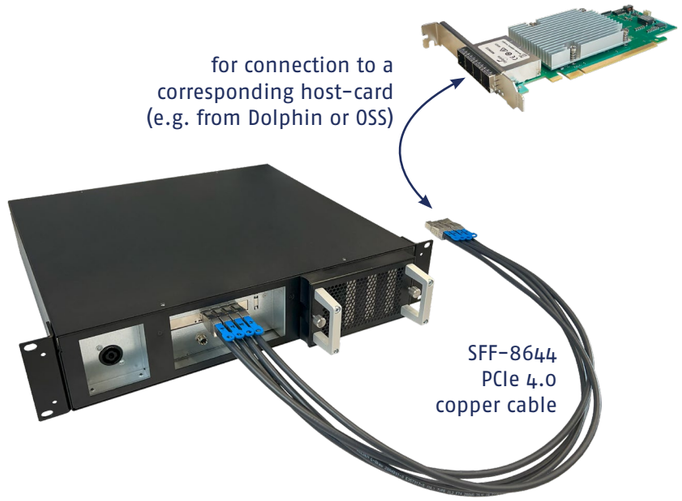



Example setup with a 4U system with host-card

Technical drawing

Unit: mm

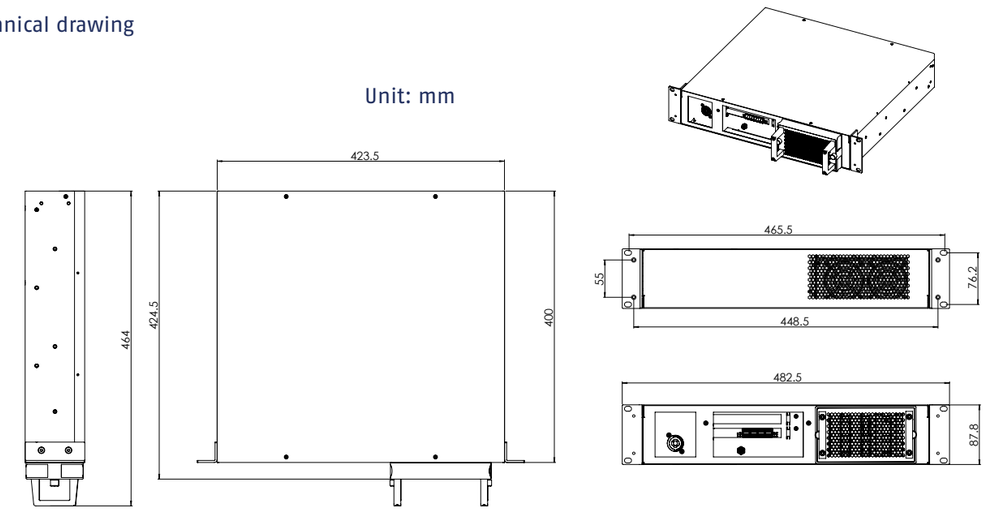

InoNet Competences and Services

Consulting | *Development* | *Testing* | *Customization* | *Manufacturing* | *Certifications*

InoNet Computer GmbH
Wettersteinstraße 18
82024 Taufkirchen, Germany
www.inonet.com

www.inonet.com | Tel.: +49 89 / 666 096 - 0 | sales@inonet.com

Published: 11. August 2025, 10:40. Subject to be change without prior notice.

InoNet QuickTray®

The innovative InoNet Highspeed Data Logging Package

Features

- ↗ *Modular storage insert for four SSDs made of industrial hard components*
- ↗ *Easy handling due to standardized mounting size (2x 5.25“)*
- ↗ *Use of the latest storage technologies (SATA III, SAS, NVMe)*
- ↗ *Storage capacities of up to 360 TB*
- ↗ *For convenient and fast data exchange between two systems*

The InoNet QuickTray® is a modular removable data carrier in drawer design and offers storage capacities of up to 120 TB* with write rates of up to 14 GBps / 112 Gbps* (2x QuickTray® up to 28 GBps / 224 Gbps*) in the application.

The standardized form factor (2x 5.25“) enables simple and fast exchange of data carriers between the vehicle and evaluation stations.

The InoNet QuickTray® guarantees extremely high handling convenience and time savings for data recording, storage and evaluation.

* Depending on SSD type and manufacturer, real measured with Iometer (continuous write mode)





Option 1:
Complete solution



Option 2:
Flexible KIT

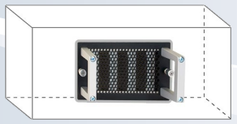

Option 3:
Stand-Alone



Option 4:
Copy-Station

Published: 29. June 2023, 11:29. Subject to be change without prior notice.

InoNet QuickTray®

Technical Data

Technology	
SSD-Type	2.5“ SSD up to 15mm
SSD-Technology	NVMe
SSD-Bandwidth	PCIe x4 (Gen 3) Link per SSD
RAID-Type	Software/Hardware
RAID-Level	0 / 1 / 5

Interfaces	
Internal	Power and data connection via host
External	PCIe x16 (Gen 3) connection on request

Mechanics	
Dimensions (W x H x D)	148.3 mm x 84 mm x 111.5 mm
Cooling	aktive

Ambient conditions during operation	
Ambient Temperature	0° ~ 50° C (at sea level)
Humidness	5 ~ 90 % relative humidity (non-condesing)
Vibration	0.6 G (10- 200Hz)
Shock	5 G/2ms

Ambient conditions in switched off state	
Ambient Temperature	-20° ~ 70° C
Humidness	5 ~ 95 % relative humidity (non-condesing)
Vibration	3 G (5- 500Hz)
Shock	20 G/11ms

InoNet Automotive Ecosystem

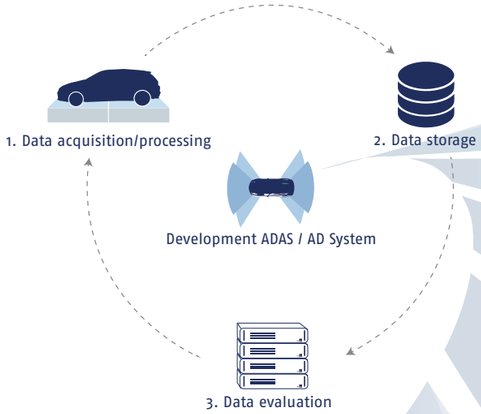

The InoNet Automotive Computer Ecosystem describes the entire spectrum of scalable hardware solutions for vehicle development – especially in the field of ADAS and AD and their subsequent testing.

Our product portfolio covers all categories, from data acquisition and processing in the vehicle to fast and secure storage on exchangeable data storage devices to subsequent data evaluation via server farms or workstations.

InoNet Computer GmbH
Wettersteinstraße 18
82024 Taufkirchen, Germany
www.inonet.com

www.inonet.com | Tel.: +49 89 / 666 096 - 0 | sales@inonet.com

Published: 29. June 2023, 11:29. Subject to be change without prior notice.

Automotive STORAGE

INONET
A EUROTECH COMPANY

InoNet QuickTray®-v3

Highspeed hot-plug & encryption-enabled data carrier for easy and fast data exchange

Features

- *Hot-plug capable*
- *Sacrificial connectors allow higher number of plugging cycles*
- *Hardware based data encryption possible*
- *Standardized size (2x 5.25“)*
- *Storage capacities of up to 240 TB per QuickTray®-v3*
- *Mechanical encoding capability*
- *Designed for in-vehicle use*
- *Backwards compatible with previous QuickTray® versions*

The InoNet QuickTray®-v3 is a modular removable data carrier in cartridge design and offers storage capacities of up to 240 TB* and write rates of up to 26 GBps / 208 Gbps* in encrypted state (2x QuickTray®-v3 up to 28 GBps / 224 Gbps*).

The standardized form factor (2x 5.25") enables easy and fast exchange of data carriers between the vehicle and evaluation stations (Copy Station). Sacrificial connectors protect the data carriers and thus increase the lifetime as well as the number of plugging cycles from approx. 50 in the past to several hundred at the same time.

The InoNet QuickTray®-v3 guarantees extremely high handling comfort and time savings for data recording, storage and evaluation.

The QuickTray®-v3 also solves the problems of the market with features such as cryptography and hot-plug.

* Depending on SSD type and manufacturer, real measured with Iometer (continuous write mode)



Flexible Kit



Complete solution





Copy Station

Published: 28. July 2025, 16:53. Subject to be change without prior notice.

Automotive STORAGE

INONET
A EUROTECH COMPANY

InoNet QuickTray®-v3

Technical Data

Technology

SSD Type	2.5“ SSD up to 15 mm
SSD Technology	NVMe
SSD Bandwidth	PCIe x4 (Gen 4) Link per SSD
RAID Type	Hardware
RAID Level	0 / 1 / 10

Interfaces

Internal	Power supply and Data Link
External	PCIe x16 (Gen 4)

Mechanics

Dimensions (W x H x D)	148.3 mm x 84 mm x 134 mm (without handles)
Cooling	active

Ambient conditions during operation

Ambient Temperature	0° ~ 50° C (depending on the used SSDs)
Humidity	5 ~ 90 % relative humidity (non-condensing)
Vibration	0.6 G (10 - 200 Hz)
Shock	5 G / 2 ms

Environment conditions when powered off

Ambient Temperature	-20° ~ 70° C
Humidity	5 ~ 95 % relative humidity (non-condensing)
Vibration	3 G (5 - 500 Hz)
Shock	20 G / 11 ms

InoNet Automotive Ecosystem

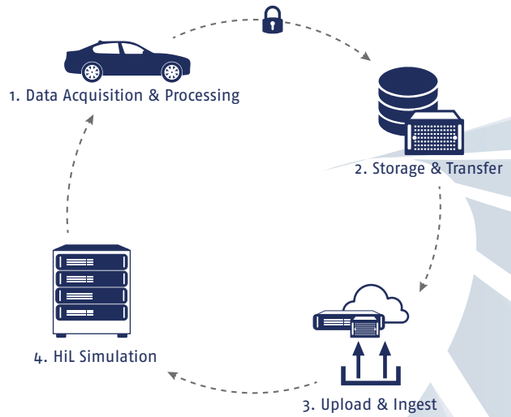

The InoNet Automotive Computer Ecosystem describes the entire spectrum of scalable hardware solutions for vehicle development – especially in the field of ADAS and AD and their subsequent testing.

Our product portfolio covers all categories, from data acquisition and processing in the vehicle to fast and secure storage on exchangeable data storage devices to subsequent data evaluation via server farms or workstations.

InoNet Computer GmbH
Wettersteinstraße 18
82024 Taufkirchen, Germany
www.inonet.com

www.inonet.com | Tel.: +49 89 / 666 096 - 0 | sales@inonet.com

Published: 28. July 2025, 16:53. Subject to be change without prior notice.

Intel® Core™ i | LAN / WiFi / BT / Mobile / GPS | 2x Bay / 2x M.2

Automotive INGEST

INONET
A EUROTECH COMPANY

Concepion®-tXf-L-v3 - Copy Station

Compact, actively cooled system for use as a copy station in the automotive environments

Features

- *High-Performance with Intel® Core™ i CPUs 10th Generation*
- *Incl. QuickTray®-v3 with up to 120 TB*
- *Slim form factor, perfect for transportation*
- *Up to 2x 10 GBit LAN*
- *Hardware-based data encryption possible*
- *Optional Wi-Fi/Bluetooth/GNSS/LTE, on request 5G*



Configuration example

*Further configurations on request!**

Mainboard:
Industrial Mainboard (mini-ITX), 24/7 operation, long-term available

Processor:
Intel® Core™ i 10th Generation
Chipset: Intel® W480E
Intel® Turbo-Boost: Depends on the selected configuration

Memory:
2x DDR4 SO-DIMM, max. 64 GB

Graphic:
Onboard Intel® UHD 630

Drive Bays:
Internal
1x M.2 (M-key, type: 2280)
External
2x 2.5" SATA-III SSD in shuttle
QuickTray®-v3
Up to 120 TB, via RAID controller PCIe x8 (Gen 3), optional data encryption

I/O:
Back
2x 1 GBit LAN (RJ45)
2x 1 GBit LAN (M12) (on request)
2x 10 GBit LAN (RJ45), PCIe x4 (Gen 3)
1x DisplayPort 1.2
1x DVI-D
1x HDMI 1.4b
2x RS-232/422/485
1x RS-232/422/485 (optional)
6x USB 3.2 (Gen 1)
2x USB 2.0
3x Audio (Line-In, Line-Out, Mic)
Internal
1x LVDS / eDP
1x GPIO Header (8 Bit)

Features:
Watchdog Timer, iAMT 14.0, TPM 2.0

Operating System:
Microsoft® Windows® 10/11, Linux®

Power Supply:
16 ~ 30 VDC, 400 Watt
NL4 connector (Neutrik)
Optional
11 ~ 30 VDC, 250/300 Watt
NL4 connector (Neutrik), four-pin with ignition pin
Efficiency >94% @ 50% load

Expansions:
1x M.2 (E-key, type: 2230)

Mechanical:
Chassis
Robust 1 mm galvanized sheet steel with powder coating
(On request: Intrusion Detection)
Dimensions (W x H x D)
215 x 224 x 303 mm
Cooling
Active, 2x 80 mm fans
Filter cartridge incl. mat
Mounting
Wallmount, Desktop, 19" compatible
(On request: two systems side by side)

Communication:
Wi-Fi/Bluetooth (optional)
Intel® M.2 Module
802.11ax Dual Band 2x2 160MHz
Bluetooth® 5.1
GNSS/LTE (optional)
Support for GPS, GLONASS, BeiDou, Galileo, QZSS
Micro SIM slot for 3G/4G
(On request: 5G with additional antennas)

Environment:
Operating Temperature
0° ~ 55° C
Storage Temperature
-20° ~ 70° C
Relative Humidity (operation)
10 ~ 90 % (non condensing)
IP Protection
IP20

** The final configuration must take care of the power and cooling capacity of the power supply and the system fans.*

Published: 10. December 2024, 15:59. Subject to be change without prior notice.

Automotive INGEST

INONET
A EUROTECH COMPANY

Concepion®-tXf-L-v3 - Copy Station

Additional illustrations

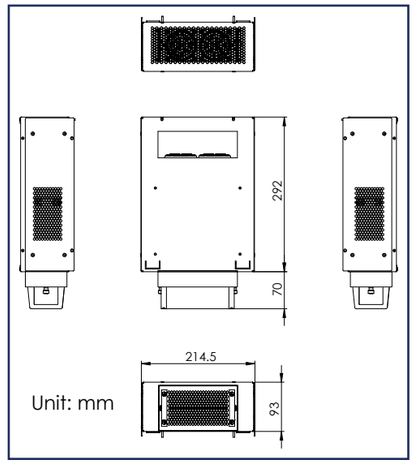

Technical drawing
QuickTray®-v3 extension

Wi-Fi/Bluetooth and GNSS/LTE (optional)
(Fig. without QuickTray®-v3 extension)



Technical drawing

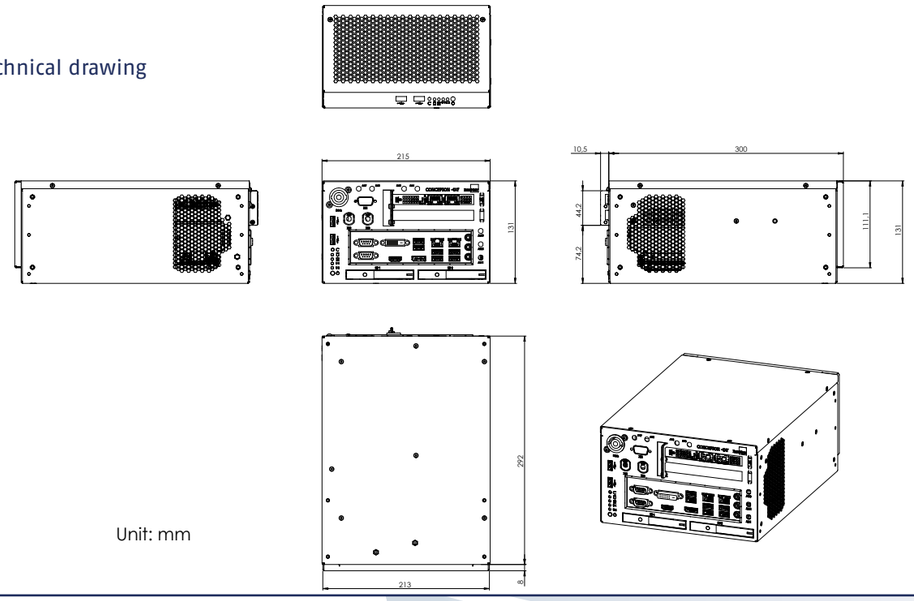

InoNet Competences and Services

Consulting | *Development* | *Testing* | *Customization* | *Manufacturing* | *Certifications*

ISO 9001

InoNet Computer GmbH
Wettersteinstraße 18
82024 Taufkirchen, Germany
www.inonet.com

www.inonet.com | Tel.: +49 89 / 666 096 - 0 | sales@inonet.com

Published: 10. December 2024, 16:02. Subject to be change without prior notice.

Automotive INGEST

INONET
A EUROTECH COMPANY

InoGest® Copy-Server II-Q-SP3

19" industrial server with 4x QuickTray®-v3 for use as a copy station in the automotive environment

Features

- *High-Performance with AMD® EPYC™ CPU*
- *Incl. 4x QuickTray®-v3 with up to 1 PetaByte*
- *Hot-plug to avoid reboots*
- *4x 100 GBit LAN (QSFP28) 2x NVIDIA® ConnectX®-6 Dx*
- *Robust full industrial components for 24/7 operation*
- *Hardware-based data encryption possible*

Configuration example

Further configurations on request!

Mainboard:
Industrial Mainboard (ATX), 24/7 operation, long-term availability

Processor:
AMD® EPYC™ 7003/7002
Socket SP3

Memory:
8x DDR4 DIMM, max. 3200 MHz
RDIMM: max. 64 GB/DIMM
LRDIMM: max. 128 GB/DIMM

Graphic:
OnBoard AST2500, 512 MB DDR4

I/O:
2x 10 GBit LAN (RJ45)
1x Dedicated IPMI LAN (RJ45)
4x 100 GBit LAN (QSFP28), 2x NVIDIA® ConnectX®-6 Dx, PCIe x16
1x RS-232
2x USB 3.2 (Gen 1)
1x USB-C 3.2 (Gen 2)
1x VGA

Power Supply:
90 ~ 264 VAC, 1200 Watt, 80 Plus

Expansions:
1x PCIe x16 (Gen 4), full height
One slot of it optional
- PCIe x16 (Gen 4)
- PCIe x8 (Gen 4), second M.2
- no PCIe, second M.2, 2x OCuLink

Optional
Additional extensions for automotive applications (Ethernet, CAN, LIN® etc.)

Mechanical:
Chassis
19 Zoll 4HE Rackmount-Chassis
Dimensions (W x H x D)
483 x 177 x 571 mm
Cooling
active, 3x 120 mm fans

Drive Bays:
Internal
2x M.2 (one M.2 slot depending on slot configuration)
4x integrated QuickTray®-v3
up to 1 PetaByte* with 16x NVMe-SSDs and up to 28 GB/s*

Environment:
Operating Temperature
0° ~ 35° C
Storage Temperature
-20° ~ 70° C
Relative Humidity
10 ~ 90 % (non condensing)
IP Protection
IP20

Operating System:
Microsoft® Windows® Server
Linux®



* Depending on SSD type and manufacturer, real measured with Iometer (continuous write mode)

Published: 17. February 2025, 08:19. Subject to be change without prior notice.

Automotive INGEST

INONET
A EUROTECH COMPANY

InoGest® Copy-Server II-Q-SP3

Additional illustrations

Rear view



Technical drawing

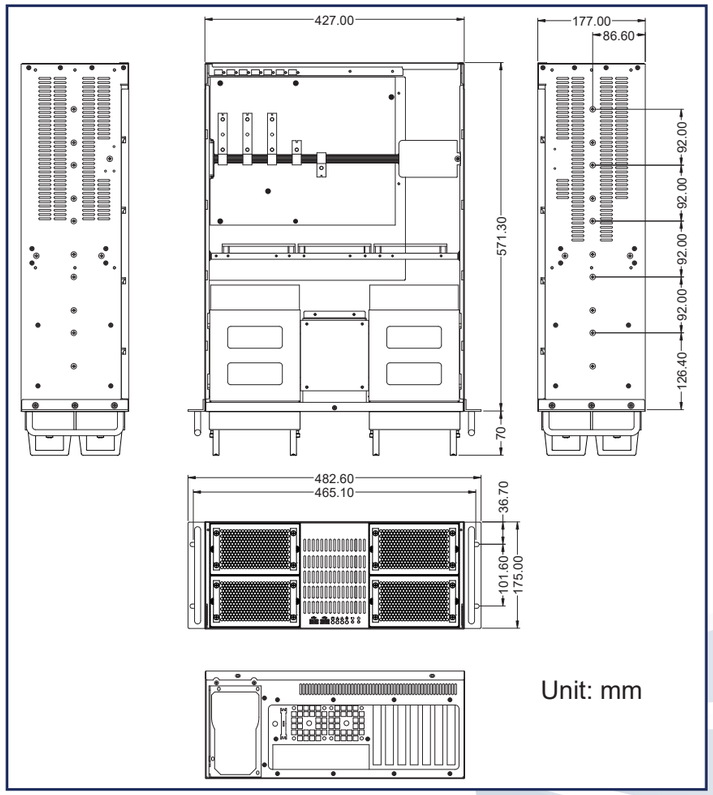



QuickTray®-v3

InoNet Competences and Services

Consulting | *Development* | *Testing* | *Customization* | *Manufacturing* | *Certifications*

InoNet Computer GmbH
Wettersteinstraße 18
82024 Taufkirchen, Germany
www.inonet.com

www.inonet.com | Tel.: +49 89 / 666 096 - 0 | sales@inonet.com

Published: 17. February 2025, 08:19. Subject to be change without prior notice.

Automotive INGEST

INONET
A EUROTECH COMPANY

InoGest® Copy-Station tXf-v3-L-R680E

Compact, actively cooled system for use as a copy station in the automotive environments

Features

- *High-Performance with Intel® Core™ i CPUs 12th/13th/14th Generation*
- *Incl. QuickTray®-v3 with up to 240 TB*
- *Slim form factor, perfect for transportation*
- *Up to 2x 25 GBit LAN*
- *Hardware-based data encryption possible*
- *Optional Wi-Fi/Bluetooth/ GNSS/LTE (5G on request)*



Configuration example

*Further configurations on request!**

Mainboard:
Industrial Mainboard (mini-ITX), 24/7 operation, long-term available

Processor:
Intel® Core™ i 12th/13th/14th Generation up to 65 Watt TDP, Socket 1700
Chipset: Intel® R680E
Intel® Turbo-Boost: Depends on the selected configuration

Memory:
2x DDR5 SO-DIMM, max. 5600 MHz
max. 64 GB

Graphic:
Onboard Intel® UHD 730/770 (depending on CPU)

Drive Bays:
Internal
2x M.2 (M-key, type: 2280)
External
2x 2.5" SATA-III SSD in shuttle
QuickTray®-v3
Up to 240 TB, via RAID controller PCIe x8 (Gen 4), optional data encryption

I/O:
Back
1x 2,5 GBit LAN (RJ45), iAMT support
2x 25 GBit LAN (SFP28), NVIDIA® ConnectX®-6 Lx, PCIe x8 (Gen 4)
Opt. 4x 1 GBit LAN (RJ45) with PoE
2x Display Port 1.4a
1x RS-232
1x RS-232/422/485
6x USB 3.2 (2x Gen 2, 4x Gen 1)
2x USB 2.0
3x Audio (Line-In, Line-Out, Mic)
Internal
1x LVDS / eDP
1x GPIO Header (8 Bit)

Features:
Watchdog Timer, iAMT, TPM 2.0

Power Supply:
12 ~ 48 VDC, 500/600 Watt
NL4 connector (Neutrik)
Efficiency >94%
Optional
11 ~ 30 VDC, 250/300 Watt
NL4 connector (Neutrik), four-pin with ignition pin

Mechanical:
Chassis
Robust 1 mm galvanized sheet steel with powder coating
(On request: Intrusion Detection)
Dimensions (W x H x D)
215 x 224 x 303 mm
Cooling
Active, 2x 80 mm fans
Filter cartridge incl. mat
Mounting
Wallmount, Desktop, 19" compatible
(On request: two systems side by side)

Communication:
Wi-Fi/Bluetooth (optional)
Intel® M.2 Module
802.11ax Dual Band 2x2 160MHz
Bluetooth® 5.1
GNSS/LTE (optional)
Support for GPS, GLONASS, BeiDou, Galileo, QZSS
Micro SIM slot for 3G/4G
(On request: 5G with additional antennas)

Environment:
Operating Temperature
0° ~ 55° C
Storage Temperature
-20° ~ 70° C
Relative Humidity (operation)
10 ~ 90 % (non condensing)
IP Protection
IP20

Operating System:
Microsoft® Windows® 10/11, Linux®

** The final configuration must take care of the power and cooling capacity of the power supply and the system fans.*

Published: 19. March 2025, 11:10. Subject to be change without prior notice.

Automotive INGEST

INONET
A EUROTECH COMPANY

InoGest® Copy-Station tXf-v3-L-R680E

Additional illustrations

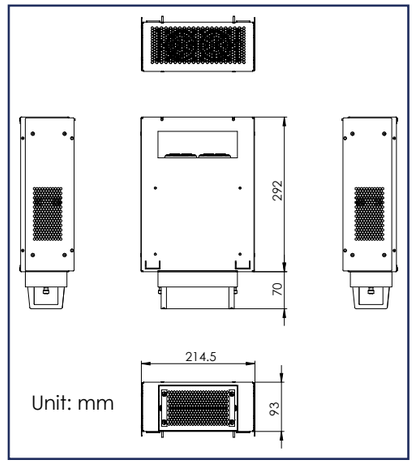

Technical drawing
QuickTray®-v3 extension

Wi-Fi/Bluetooth and GNSS/LTE (optional)
(Fig. without QuickTray®-v3 extension)



Technical drawing

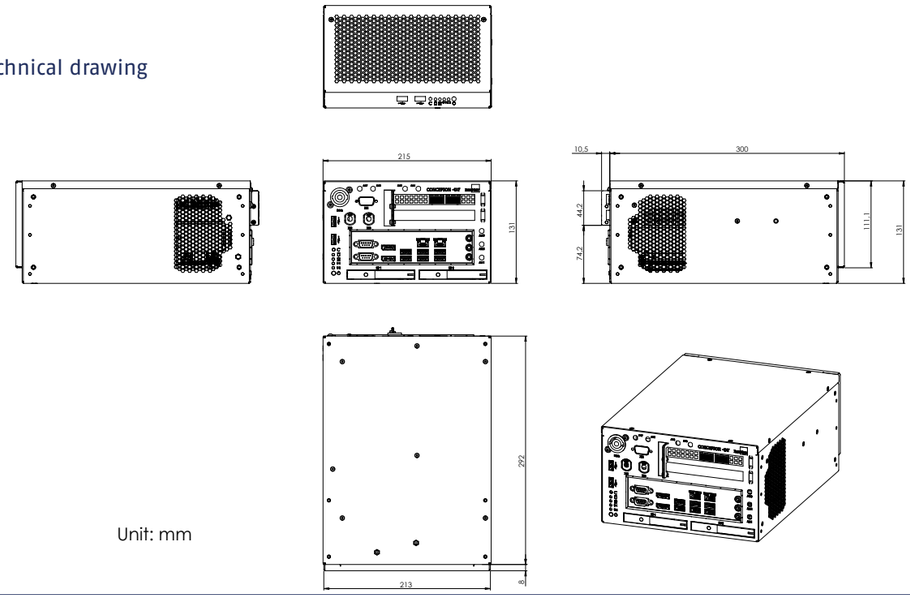

InoNet Competences and Services

Consulting | *Development* | *Testing* | *Customization* | *Manufacturing* | *Certifications*

InoNet Computer GmbH
Wettersteinstraße 18
82024 Taufkirchen, Germany
www.inonet.com

www.inonet.com | Tel.: +49 89 / 666 096 - 0 | sales@inonet.com

Published: 19. March 2025, 11:10. Subject to be change without prior notice.

Automotive INGEST

INONET
A EUROTECH COMPANY

InoGest® Copy-Station tXf-v3-L-AM5

Compact, actively cooled system for use as a copy station in the automotive environments with AMD® CPU

Features

- *High-Performance with AMD® EPYC™/Ryzen™ CPUs*
- *Incl. QuickTray®-v3 with up to 240 TB*
- *Slim form factor, perfect for transportation*
- *Up to 2x 25 GBit LAN*
- *Hardware-based data encryption possible*
- *Optional Wi-Fi/Bluetooth/ GNSS/LTE (5G on request)*



Configuration example

Further configurations on request!

Mainboard:
Industrial Mainboard (mini-ITX), 24/7 operation, long-term available

Processor:
AMD® Ryzen™ 9000/8000/7000 or AMD® EPYC™ 4005/4004 series
Socket AM5
up to 65 Watt TDP

Memory:
2x DDR5 DIMM, max. 5200 MHz
max. 96 GB

Graphic:
AMD® RDNA™ 2 architecture (depending on CPU)

Drive Bays:
Internal
1x M.2 (M-key, type: 2242/2280)
External
2x 2.5" SATA-III SSD in shuttle
QuickTray®-v3
Up to 240 TB, via RAID controller PCIe x8 (Gen 4), optional data encryption

I/O:
Back
2x 1 GBit LAN (RJ45)
2x 25 GBit LAN (SFP28), NVIDIA® ConnectX®-6 Lx, PCIe x8 (Gen 4)
Opt. 4x 1 GBit LAN (RJ45) with PoE
3x Display Port 1.2
6x USB 3.2 (Gen 2)
2x USB 2.0
2x Audio (Line-Out, Mic)
Internal
1x eDP
2x RS-232/422/485

Features:
Watchdog Timer, TPM 2.0

Operating System:
Microsoft® Windows® 10/11, Linux®

Power Supply:
12 ~ 48 VDC, 500 Watt
NL4 connector (Neutrik)
Efficiency >94%
Optional
11 ~ 30 VDC, 250/300 Watt
NL4 connector (Neutrik), four-pin with ignition pin

Expansions:
1x M.2 (E-key, type: 2230)
1x M.2 (B-key, type: 3042/3052)
1x SIM slot

Mechanical:
Chassis
Robust 1 mm galvanized sheet steel with powder coating
(On request: Intrusion Detection)
Dimensions (W x H x D)
215 x 224 x 303 mm
Cooling
Active, 2x 80 mm fans
Mounting
Wallmount, Desktop, 19" compatible
(On request: two systems side by side)

Communication:
Wi-Fi/Bluetooth (optional)
Intel® M.2 Module
802.11ax Dual Band 2x2 160MHz
Bluetooth® 5.1
GNSS/LTE (optional)
Support for GPS, GLONASS, BeiDou, Galileo, QZSS
Micro SIM slot for 3G/4G
(On request: 5G with additional antennas)

Environment:
Operating Temperature
0° ~ 55° C
Storage Temperature
-20° ~ 70° C
Relative Humidity (operation)
10 ~ 90 % (non condensing)
IP Protection
IP20

Published: 17. June 2026, 11:48. Subject to be change without prior notice.

Automotive INGEST

INONET
A EUROTECH COMPANY

InoGest® Copy-Station tXf-v3-L-AM5

Additional illustrations

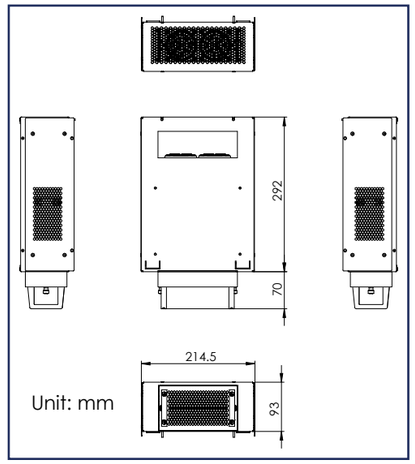

Technical drawing
QuickTray®-v3 extension

Wi-Fi/Bluetooth and GNSS/LTE (optional)
(Fig. without QuickTray®-v3 extension)



Technical drawing

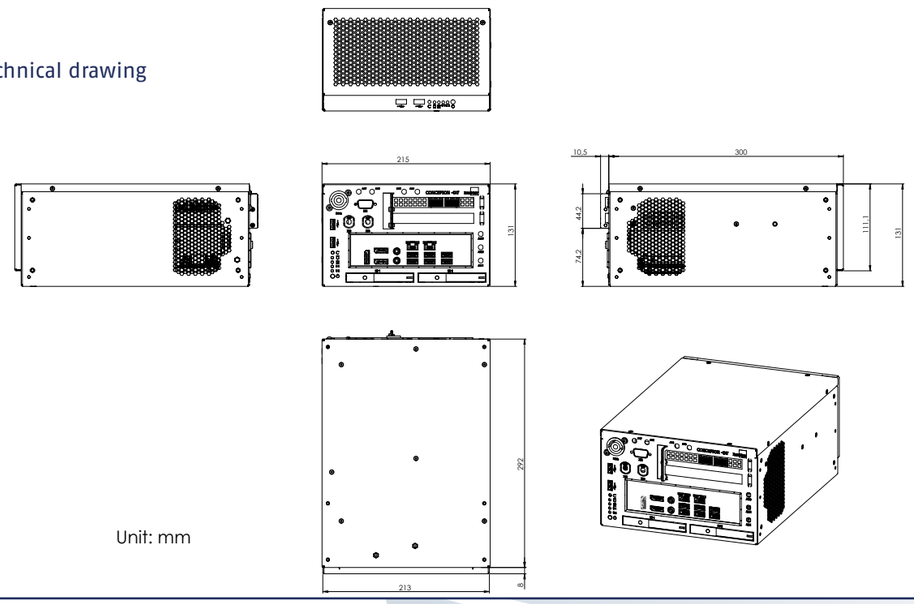

InoNet Competences and Services

Consulting | *Development* | *Testing* | *Customization* | *Manufacturing* | *Certifications*

ISO 9001

InoNet Computer GmbH
Wettersteinstraße 18
82024 Taufkirchen, Germany
www.inonet.com

www.inonet.com | Tel.: +49 89 / 666 096 - 0 | sales@inonet.com

Published: 17. June 2026, 11:48. Subject to be change without prior notice.

INONET
A EUROTECH COMPANY

InoHiL®-B17QW-SP3

19“ liquid-cooled HiL server for complex model calculations, signal processing, machine learning and AI

Features

- ↗ *High computing power due to powerful CPU and up to 5x Tensor cards*
- ↗ *Liquid cooling for CPU and Tensor cards*
- ↗ *Multi-GPU support*
- ↗ *Robust full industrial components for 24/7 operation*
- ↗ *Expandable through 7 PCIe x16 slots and InoNet QuickTray®-v3*
- ↗ *Ideal for intensive signal processing and complex model calculations*



Configuration example

Further configurations on request!

Mainboard:
Industrial Mainboard (ATX), 24/7 operation, long-term availability

Processor:
AMD® EPYC™ 7003/7002
Liquid cooled

Memory:
8x DDR4 DIMM, max. 3200 MHz
RDIMM/LRDIMM: max. 128 GB/DIMM

AI Support:
Up to 5x Tensor cards, PCIe x16
Liquid cooled

I/O:
2x 10 GBit LAN (RJ45)
1x Dedicated IPMI LAN (RJ45)
Optional 2x 100 GBit LAN (QSFP28), NVIDIA® ConnectX®-6 Dx, PCIe x16
1x RS-232
2x USB 3.2 (Gen 1)
1x USB-C 3.2 (Gen 2)
2x DisplayPort (optional)
1x VGA

Drive Bays:
Internal
1x 2.5“, 2x M.2 (one M.2 slot depending on slot configuration)
Integrated QuickTray®-v3
up to 240 TB* with 4x NVMe-SSDs
up to 26 GB/s*
Optional Extension
with up to 2x QuickTray®-v3
(2x QuickTray®-v3 up to 28 GB/s*)

Graphic:
OnBoard AST2500, 512 MB DDR4
Optional
NVIDIA® RTX 6000, 48 GB GDDR6, 4x DisplayPort 1.4, PCIe x16

Power Supply:
90 ~ 264 VAC, 1200 Watt, 80 Plus
On request: Redundant power supply for AC and DC

Expansions:
7x PCIe x16 (Gen 4), full height
One slot of it optional
- PCIe x16 (Gen 4)
- PCIe x8 (Gen 4), second M.2
- no PCIe, second M.2, 2x OCuLink

Optional
Additional extensions for automotive applications (Ethernet, CAN, LIN® etc.)

Mechanical:
Chassis
19 Zoll 4HE Rackmount-Chassis
Dimensions (W x H x D)
430 x 175 x 400 mm
QuickTray® extension:
430 x 115 x 417 mm (2x QuickTray®)
Cooling
Hybrid cooling system with 2x 120 mm fans and liquid cooling for CPU and up to 5 Tensor cards
Remote condenser with 9x 120 mm fans for 19“ installation

Environment:
Operating Temperature
0° ~ 55° C**
Storage Temperature
-20° ~ 70° C
Relative Humidity
10 ~ 90 % (non condensing)
IP Protection
IP20

Operating System:
Microsoft® Windows® Server/11
Linux®

* Depending on SSD type and manufacturer, real measured with Iometer (continuous write mode)

** In full expansion at full load (24/7): 0° ~ 40° C

Published: 11. June 2024, 15:57. Subject to be change without prior notice.

INONET
A EUROTECH COMPANY

InoHiL®-B17QW-SP3

Additional illustrations

Remote condenser with 9x 120 mm fans for liquid cooling



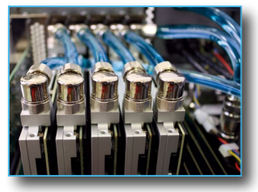

Up to 5x Tensor cards
PCIe x16
Liquid cooled

Optional extension with up to 2x QuickTray®-v3



Up to 26 GB/s* each QuickTray®-v3 (2x QuickTray®-v3 up to 28 GB/s*) and 240 TB* with 4x NVMe SSDs

* Depending on SSD type and manufacturer, real measured with Iometer (continuous write mode)

InoNet Automotive Ecosystem

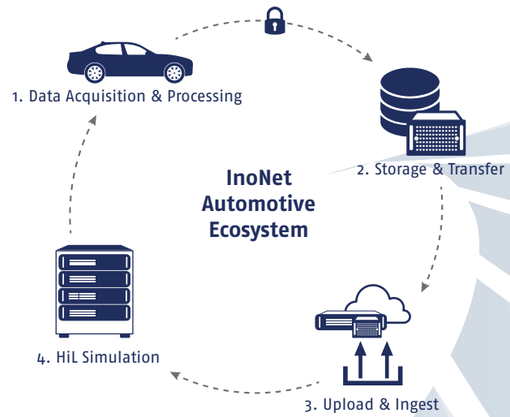

The InoNet Automotive Computer Ecosystem describes the entire spectrum of scalable hardware solutions for vehicle development - especially in the field of ADAS and AD and their subsequent testing.

Our product portfolio covers all categories, from data acquisition and processing in the vehicle to fast and secure storage on exchangeable data storage devices to subsequent data evaluation via server farms or workstations.

InoNet Computer GmbH
Wettersteinstraße 18
82024 Taufkirchen, Germany
www.inonet.com

Published: 11. June 2024, 15:57. Subject to be change without prior notice.

INONET
A EUROTECH COMPANY

InoHiL®-II-C621

19" HiL server for a wide range of signal processing in the automotive environment

Features

- *High-Performance with Intel® Xeon® Scalable CPU*
- *Up to 7x PCIe slots for expansion cards*
- *Robust full industrial components for 24/7 operation*
- *Externally accessible 2x 2.5" shuttles for SSDs*
- *Additional extensions for Ethernet, CAN, LIN® etc. optional*

Configuration example

Further configurations on request!

Mainboard:
Industrial Mainboard (ATX), 24/7 operation, long-term availability

Processor:
Intel® Xeon® Scalable (2. Gen)
Chipset: Intel® C621

Memory:
6x DDR4 DIMM, max. 2933 MHz
RDIMM/LRDIMM: max. 768 GB

Graphic:
OnBoard AST2510, 1 GB DDR4

Drive Bays:
Internal
1x M.2 (M-key, Type: 2280)
External
2x 2.5" SATA-III SSDs in shuttle
3x 5.25"

Operating System:
Microsoft® Windows® Server/11
Linux®

Features:
Watchdog Timer
TPM 2.0 support

Power Supply:
90 ~ 264 VAC, 500 Watt, 80 Plus

Expansions:
2x PCIe x16 or 4x PCIe x8 (Gen 3)
1x PCIe x8 (Gen 3)
1x PCIe x4 (Gen 3)
1x PCIe x1 (Gen 3)
Full height
Optional
Additional extensions for automotive applications (Ethernet, CAN, LIN® etc.)

Mechanical:
Chassis
19" 4U rackmount chassis
Dimensions (W x H x D)
483 x 177 x 510 mm
Cooling
active, 1x 120 mm fan

I/O:
Back
2x 1 GBit LAN (RJ45)
4x USB 3.0
2x USB 2.0
1x RS-232
1x VGA
Front
2x USB 3.0
Internal
1x USB 2.0 (Typ A)
1x GPIO Header (8 Bit)

Environment:
Operating Temperature
0° ~ 35° C
Storage Temperature
-20° ~ 70° C
Relative Humidity
10 ~ 90 % (non condensing)
IP Protection
IP20



Published: 23. July 2024, 11:58. Subject to be change without prior notice.

INONET
A EUROTECH COMPANY

InoHiL®-II-C621

Additional illustrations



Front view (open)



Rear view

Technical drawing

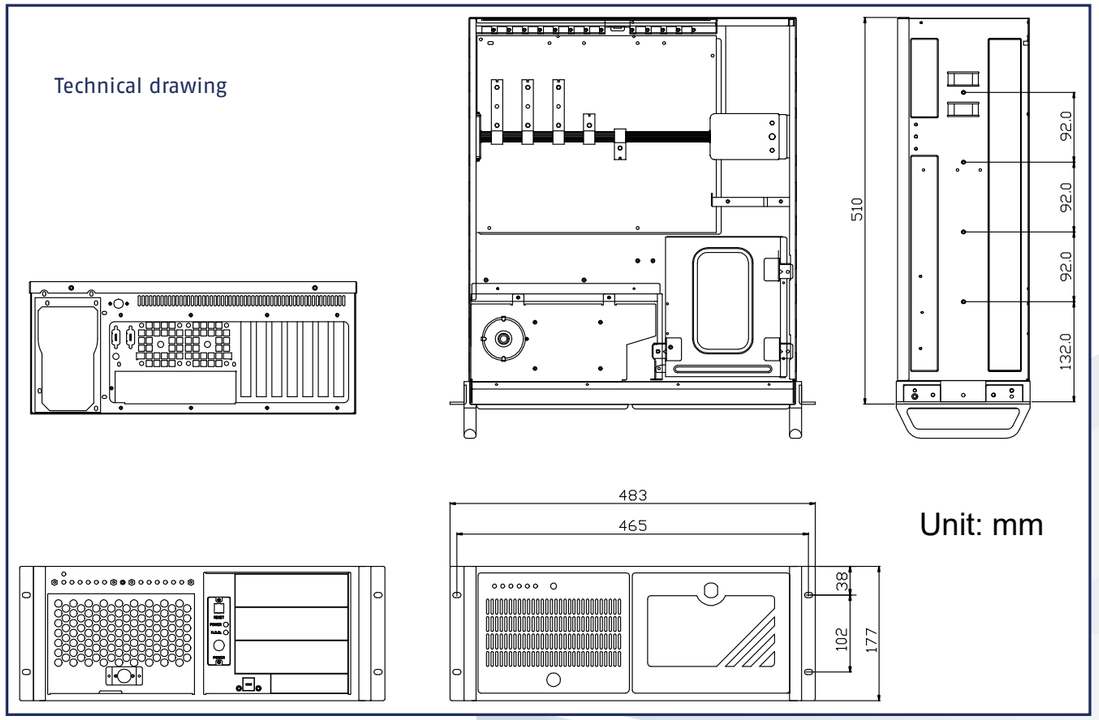

Unit: mm

InoNet Competences and Services

Consulting | *Development* | *Testing* | *Customization* | *Manufacturing* | *Certifications*

InoNet Computer GmbH
Wettersteinstraße 18
82024 Taufkirchen, Germany
www.inonet.com

www.inonet.com | Tel.: +49 89 / 666 096 - 0 | sales@inonet.com

Published: 23. July 2024, 11:58. Subject to be change without prior notice.

INONET
A EUROTECH COMPANY

InoHiL®-II-Q-C621

19" HiL server with QuickTray®-v3 for model calculations and signal processing in the automotive environment

Features

- *High-Performance with Intel® Xeon® Scalable CPU*
- *Incl. QuickTray®-v3 with up to 240 TB*
- *Hot-plug to avoid reboots*
- *Robust full industrial components for 24/7 operation*
- *Hardware-based data encryption possible*
- *Expandable with GPUs*
- *Additional extensions for Ethernet, CAN, LIN® etc. optional*

Configuration example

Further configurations on request!

Mainboard:
Industrial Mainboard (ATX), 24/7 operation, long-term availability

Processor:
Intel® Xeon® Scalable (2. Gen)
Chipset: Intel® C621

Memory:
6x DDR4 DIMM, max. 2933 MHz
RDIMM/LRDIMM: max. 768 GB

Graphic:
OnBoard AST2510, 1 GB DDR4

Drive Bays:
Internal
1x M.2 (M-key, Type: 2280)
External
2x 2.5" SATA-III SSDs in shuttle
1x 5.25"
Integrated QuickTray®-v3
up to 240 TB* with 4x NVMe-SSDs
up to 26 GB/s*

Operating System:
Microsoft® Windows® Server/10/11
Linux®

Features:
Watchdog Timer
TPM 2.0 support

Power Supply:
90 ~ 264 VAC , 500 Watt, 80 Plus

Expansions:
1x PCIe x16 or 2x PCIe x8 (Gen 3)
1x PCIe x16 used by RAID controller
1x PCIe x8 (Gen 3)
1x PCIe x4 (Gen 3)
1x PCIe x1 (Gen 3)
Full height
Optional
Additional extensions for automotive applications (Ethernet, CAN, LIN® etc.)

Mechanical:
Chassis
19" 4U rackmount chassis
Dimensions (W x H x D)
483 x 177 x 510 mm
Cooling
active, 1x 120 mm fan

I/O:
Back
2x 1 GBit LAN (RJ45)
4x USB 3.0
2x USB 2.0
1x RS-232
1x VGA
Front
2x USB 3.0
Internal
1x USB 2.0 (Typ A)
1x GPIO Header (8 Bit)

Environment:
Operating Temperature
0° ~ 35° C
Storage Temperature
-20° ~ 70° C
Relative Humidity
10 ~ 90 % (non condensing)
IP Protection
IP20



* Depending on SSD type and manufacturer, real measured with Iometer (continuous write mode)

Published: 23. July 2024, 11:58. Subject to be change without prior notice.

INONET
A EUROTECH COMPANY

InoHiL®-II-Q-C621

Additional illustrations

Rear view



Technical drawing

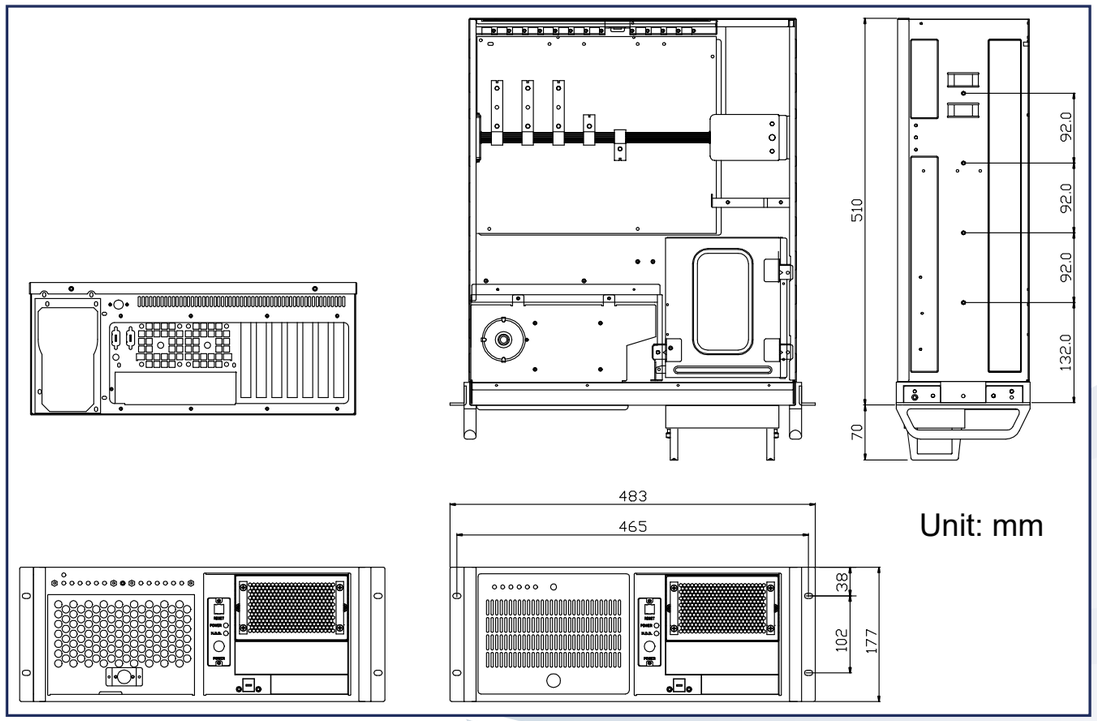

InoNet Competences and Services

Consulting | *Development* | *Testing* | *Customization* | *Manufacturing* | *Certifications*

InoNet Computer GmbH
Wettersteinstraße 18
82024 Taufkirchen, Germany
www.inonet.com

www.inonet.com | Tel.: +49 89 / 666 096 - 0 | sales@inonet.com

Published: 23. July 2024, 11:58. Subject to be change without prior notice.



Panel PCs and Industrial Displays

From the user interface to AI computing power: the right HMI solution for your application

Panel PCs and industrial displays are the direct interface between humans and machines – and therefore one of the most critical points in any industrial application. They must be rugged and durable enough to withstand harsh environmental conditions – including extreme temperatures, dust, humidity, and mechanical stress – while simultaneously providing an intuitive and efficient user interface.

HMI requirements in the industrial sector are constantly growing – more computing power for complex visualizations, higher resolutions, more precise touch technologies, and, increasingly, connectivity for IIoT applications. InoNet offers the right solution for every application: from cost-effective entry-level devices to highly specialized, fully configurable systems with optional long-term availability.

Lumina® Panel PCs

Panel computers for the industrial environment should be resilient and robust and function flawlessly in a challenging environment. Our panel PCs offer an efficient, intuitive user interface and can withstand extreme temperatures and strong vibrations. The computers are protected against dust and water and are designed for 24/7 operation.

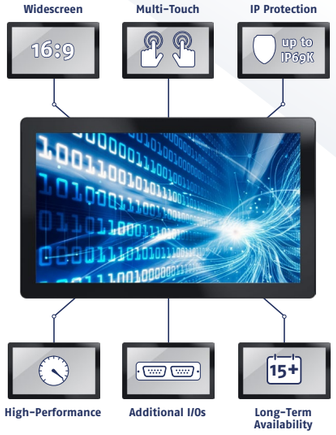

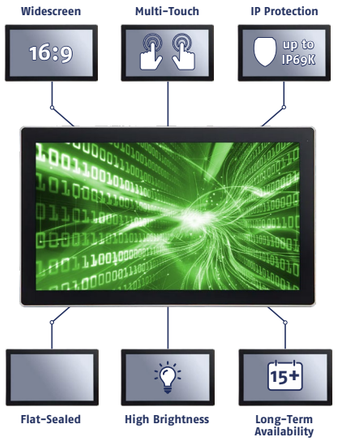

Radiance® Industrie Displays

Unlike conventional monitors, industrial displays need to be particularly resistant to the ingress of dust and dirt and must be able to perform reliably in continuous operation even at high environmental temperatures. Industrial displays from InoNet are available with both resistive touch and projected capacitive multi-touch in display sizes from 3.5" to 21.5". The portfolio also includes medical displays that are certified and approved for use in medical environments, as well as rackmount keyboard drawers with integrated displays.

Overview HMI

Panel PCs and Industrial Displays – The interface between humans and machines

Lumina® Panel PCs

Lumina®-T101	Intel® Core™ i	10.1"	PCAP	1280 x 800
Lumina®-T156	Intel® Core™ i	15.6"	PCAP	1920 x 1080
Lumina®-T185	Intel® Core™ i	18.5"	PCAP	1920 x 1080
Lumina®-T215	Intel® Core™ i	21.5"	PCAP	1920 x 1080
Lumina®-T238	Intel® Core™ i	23.8"	PCAP	1920 x 1080
Lumina®S-T101	Intel® Core™ Ultra	10.1"	PCAP	1280 x 800
Lumina®S-T156	Intel® Core™ Ultra	15.6"	PCAP	1920 x 1080
Lumina®S-T215	Intel® Core™ Ultra	21.5"	PCAP	1920 x 1080
Lumina®-TPC-312	Intel® Core™ i	12.1"	Resistive	1024 x 768
Lumina®-TPC-315	Intel® Core™ i	15"	Resistive	1024 x 768
Lumina®-TPC-317	Intel® Core™ i	17"	Resistive	1280 x 1024
Lumina®-SPC-515	Intel® Core™ i	15"	PCAP	1024 x 768
Lumina®-POC-615	Intel® Core™ i	15.6"	PCAP	1920 x 1080
Lumina®-POC-621	Intel® Core™ i	21.5"	PCAP	1920 x 1080
Lumina®-POC-624	Intel® Core™ i	23.8"	PCAP	1920 x 1080

Radiance® Industrie Displays

Radiance®-T101	10.1"	PCAP	1280 x 800
Radiance®-T156	15.6"	PCAP	1920 x 1080
Radiance®-T185	18.5"	PCAP	1920 x 1080
Radiance®-T215	21.5"	PCAP	1920 x 1080
Radiance®-T238	23.8"	PCAP	1920 x 1080
Radiance®-FPM-7061T	6.5"	Resistive	640 x 480
Radiance®-FPM-7121T	12.1"	Resistive	1024 x 768
Radiance®-FPM-7151W	15.6"	PCAP	1366 x 768
Radiance®-FPM-7181W	18.5"	PCAP	1366 x 768
Radiance®-FPM-7211W	21.5"	PCAP	1920 x 1080
Radiance®-FPM-715-R9AE	15"	Resistive	1024 x 768
Radiance®-FPM-717-R9AE	17"	Resistive	1280 x 1024
Radiance®-FPM-719-R9AE	19"	Resistive	1280 x 1024

Published: 13. October 2026, 08:44. Subject to be change without prior notice.

INONET
A EUROTECH COMPANY

Lumina®-T101

Fanless 10.1“ Panel PC with Projected Capacitive Touchscreen

INONET
A EUROTECH COMPANY



Features

- *10.1“ TFT-LCD display*
- *Flexible CPU Options*
- *Fanless Design*
- *Multiple Interfaces*

TECHNICAL SPECIFICATIONS		
Display	**Type**	10.1“ TFT LCD
	Viewing Angle	85° H / 85° V
	Resolution	1280 x 800
	Brightness	400 cd/m²
	MTBF Backlight	30,000 hours
Touchscreen	**Type**	Projected capacitive 10 point Touch
	Life Time	10 Million activations
Processor		see „Versions“
RAM		see „Versions“
Masse Storage	**Internal**	1x M.2 (M-key, type: 2280) 1x M.2 (M-key, type: 2242/2260/2280) 1x 2.5“
	Equipped with	see „Versions“
Expansions	**Internal**	1x M.2 (E-key, type: 2230) 1x M.2 (B-key, type: 3042/3052)
I/O	**LAN**	2x 1 GBit (RJ45) 2x 1 GBit (RJ45) optional
	USB	see „Versions“
	Serial	2x RS-232/422/485
	HDMI	1x
	Audio	1x Line-Out
	GPIO	optional via expansion port
Power Supply	**Input**	9 ~ 36 VDC
	External Power Supply	yes, DC 12V/5A
Environment	**Operating Temperature**	-10° ~ 60° C (with air flow)
	Storage Temperature	-20° ~ 70° C
	Relative Humidity	0 ~ 95 % (non condensing)
	Vibration	With SSD: 3 Grms, IEC 60068-2-64, random, 5 ~ 500 Hz, 1 hr/axis
	Shock	With SSD: 30 G, IEC 60068-2-27, half sine, 11 ms duration
IP Protection		IP65 Front
Mechanical	**Dimensions (W x H x D)**	289.53 x 192.40 x 68 mm
	Chassis	Aluminum
	Cooling	Passive
	Mounting	Panel (cutout dimensions W x H: 275 x 178 mm), VESA 75/100
Operating System		Microsoft® Windows® 11 IoT
Features		Watchdog Timer

Published: 03. September 2026, 15:31. Subject to be change without prior notice.

Lumina®-T101
Fanless 10.1“ Panel PC with Projected Capacitive Touchscreen
INONET A EUROTECH COMPANY

VERSIONS			
Processor	Intel® Processor N100	Intel® Core™ i5-1235U	Intel® Core™ i7-1255U
RAM	8 GB DDR5 SO-DIMM, max. 16 GB	16 GB DDR4 SO-DIMM, max. 64 GB	16 GB DDR4 SO-DIMM, max. 64 GB
Mass Storage	256 GB SSD, 2.5“	512 GB SSD, 2.5“	1 TB SSD, 2.5“
USB	2x USB 3.0 4x USB 2.0	4x USB 3.0 2x USB 2.0	4x USB 3.0 2x USB 2.0
Item Number	**Lumina®-T101-Intel/N100**	**Lumina®-T101-Intel/i5-1235U**	**Lumina®-T101-Intel/i7-1255U**



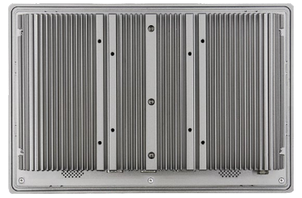

Back

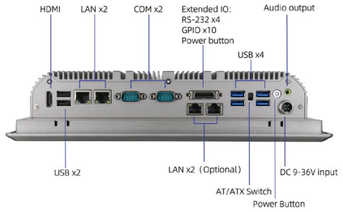

I/O

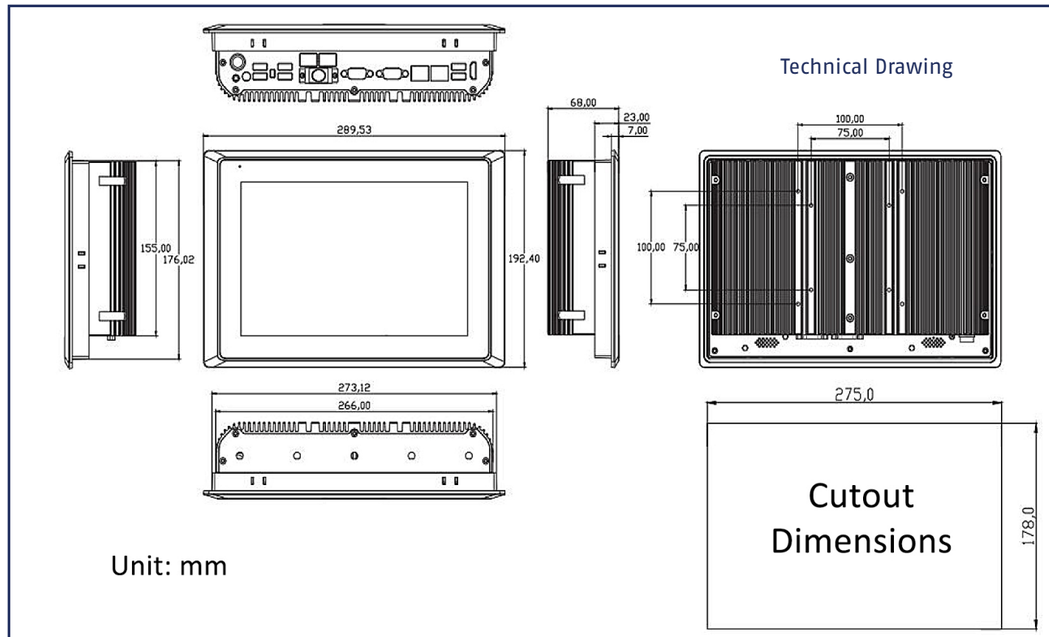

InoNet Competences and Services

Consulting *Development* *Testing* *Customization* *Manufacturing* *Certifications*

ISO 9001

InoNet Computer GmbH
Wettersteinstraße 18
82024 Taufkirchen, Germany
www.inonet.com

www.inonet.com | Tel.: +49 89 / 666 096 - 0 | sales@inonet.com

Published: 03. September 2026, 15:31. Subject to be change without prior notice.

Lumina®-T156

Fanless 15.6“ Panel PC with Projected Capacitive Touchscreen

INONET
A EUROTECH COMPANY



Features

- *15.6“ Full HD TFT-LCD display*
- *Flexible CPU Options*
- *Fanless Design*
- *Multiple Interfaces*

TECHNICAL SPECIFICATIONS		
Display	**Type**	15.6“ TFT LCD
	Viewing Angle	85° H / 85° V
	Resolution	1920 x 1080
	Brightness	250 cd/m²
	MTBF Backlight	30,000 hours
Touchscreen	**Type**	Projected capacitive 10 point Touch
	Life Time	10 Million activations
Processor		see „Versions“
RAM		see „Versions“
Masse Storage	**Internal**	1x M.2 (M-key, type: 2280) 1x M.2 (M-key, type: 2242/2260/2280) 1x 2.5“
	Equipped with	see „Versions“
Expansions	**Internal**	1x M.2 (E-key, type: 2230) 1x M.2 (B-key, type: 3042/3052)
I/O	**LAN**	2x 1 GBit (RJ45) 2x 1 GBit (RJ45) optional
	USB	see „Versions“
	Serial	2x RS-232/422/485
	HDMI	1x
	Audio	1x Line-Out
	GPIO	optional via expansion port
Power Supply	**Input**	9 ~ 36 VDC
	External Power Supply	yes, DC 12V/5A
Environment	**Operating Temperature**	-10° ~ 60° C (with air flow)
	Storage Temperature	-20° ~ 70° C
	Relative Humidity	0 ~ 95 % (non condensing)
	Vibration	With SSD: 3 Grms, IEC 60068-2-64, random, 5 ~ 500 Hz, 1 hr/axis
	Shock	With SSD: 30 G, IEC 60068-2-27, half sine, 11 ms duration
IP Protection		IP65 Front
Mechanical	**Dimensions (W x H x D)**	378.56 x 235.49 x 66.5 mm
	Chassis	Aluminum
	Cooling	Passive
	Mounting	Panel (cutout dimensions W x H: 373 x 230 mm), VESA 75/100
Operating System		Microsoft® Windows® 11 IoT
Features		Watchdog Timer

Published: 01. October 2026, 15:17. Subject to be change without prior notice.

Lumina®-T156
Fanless 15.6“ Panel PC with Projected Capacitive Touchscreen
INONET A EUROTECH COMPANY

VERSIONS			
Processor	Intel® Processor N100	Intel® Core™ i5-1235U	Intel® Core™ i7-1255U
RAM	8 GB DDR5 SO-DIMM, max. 16 GB	16 GB DDR4 SO-DIMM, max. 64 GB	16 GB DDR4 SO-DIMM, max. 64 GB
Mass Storage	256 GB SSD, 2.5“	512 GB SSD, 2.5“	1 TB SSD, 2.5“
USB	2x USB 3.0 4x USB 2.0	4x USB 3.0 2x USB 2.0	4x USB 3.0 2x USB 2.0
Item Number	**Lumina®-T156-Intel/N100**	**Lumina®-T156-Intel/i5-1235U**	**Lumina®-T156-Intel/i7-1255U**





Back



Top



I/O

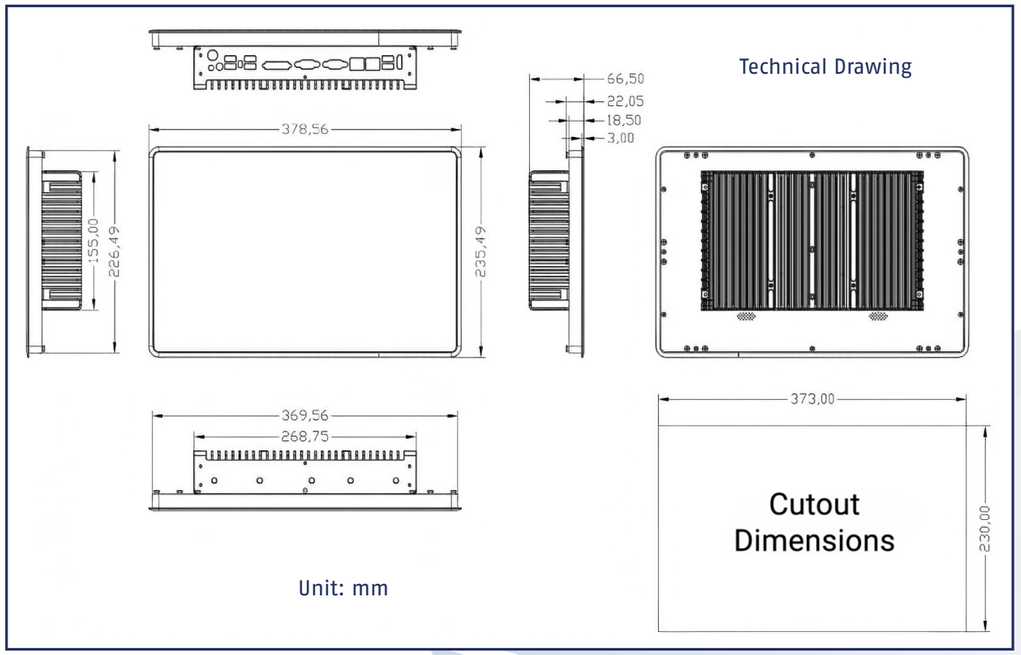

InoNet Competences and Services

Consulting *Development* *Testing* *Customization* *Manufacturing* *Certifications*

InoNet Computer GmbH
Wettersteinstraße 18
82024 Taufkirchen, Germany
www.inonet.com

www.inonet.com | Tel.: +49 89 / 666 096 - 0 | sales@inonet.com

Published: 01. October 2026, 15:17. Subject to be change without prior notice.

Lumina®-T185

Fanless 18.5“ Panel PC with Projected Capacitive Touchscreen

INONET
A EUROTECH COMPANY



Features

- *18.5“ Full HD TFT-LCD display*
- *Flexible CPU Options*
- *Fanless Design*
- *Multiple Interfaces*

TECHNICAL SPECIFICATIONS		
Display	**Type**	18.5“ TFT LCD
	Viewing Angle	85° H / 85° V
	Resolution	1920 x 1080
	Brightness	250 cd/m²
	MTBF Backlight	30,000 hours
Touchscreen	**Type**	Projected capacitive 10 point Touch
	Life Time	10 Million activations
Processor		see „Versions“
RAM		see „Versions“
Masse Storage	**Internal**	1x M.2 (M-key, type: 2280) 1x M.2 (M-key, type: 2242/2260/2280) 1x 2.5“
	Equipped with	see „Versions“
Expansions	**Internal**	1x M.2 (E-key, type: 2230) 1x M.2 (B-key, type: 3042/3052)
I/O	**LAN**	2x 1 GBit (RJ45) 2x 1 GBit (RJ45) optional
	USB	see „Versions“
	Serial	2x RS-232/422/485
	HDMI	1x
	Audio	1x Line-Out
	GPIO	optional via expansion port
Power Supply	**Input**	9 ~ 36 VDC
	External Power Supply	yes, DC 12V/5A
Environment	**Operating Temperature**	-10° ~ 60° C (with air flow)
	Storage Temperature	-20° ~ 70° C
	Relative Humidity	0 ~ 95 % (non condensing)
	Vibration	With SSD: 3 Grms, IEC 60068-2-64, random, 5 ~ 500 Hz, 1 hr/axis
	Shock	With SSD: 30 G, IEC 60068-2-27, half sine, 11 ms duration
IP Protection		IP65 Front
Mechanical	**Dimensions (W x H x D)**	447.2 x 273.6 x 66.5 mm
	Chassis	Aluminum
	Cooling	Passive
	Mounting	Panel (cutout dimensions W x H: 441 x 267 mm), VESA 75/100
Operating System		Microsoft® Windows® 11 IoT
Features		Watchdog Timer

Published: 03. September 2026, 15:31. Subject to be change without prior notice.

Lumina®-T185

Fanless 18.5“ Panel PC with Projected Capacitive Touchscreen

INONET
A EUROTECH COMPANY

VERSIONS			
Processor	Intel® Processor N100	Intel® Core™ i5-1235U	Intel® Core™ i7-1255U
RAM	8 GB DDR5 SO-DIMM, max. 16 GB	16 GB DDR4 SO-DIMM, max. 64 GB	16 GB DDR4 SO-DIMM, max. 64 GB
Mass Storage	256 GB SSD, 2.5“	512 GB SSD, 2.5“	1 TB SSD, 2.5“
USB	2x USB 3.0 4x USB 2.0	4x USB 3.0 2x USB 2.0	4x USB 3.0 2x USB 2.0
Item Number	**Lumina®-T185-Intel/N100**	**Lumina®-T185-Intel/i5-1235U**	**Lumina®-T185-Intel/i7-1255U**





Back



Top



I/O

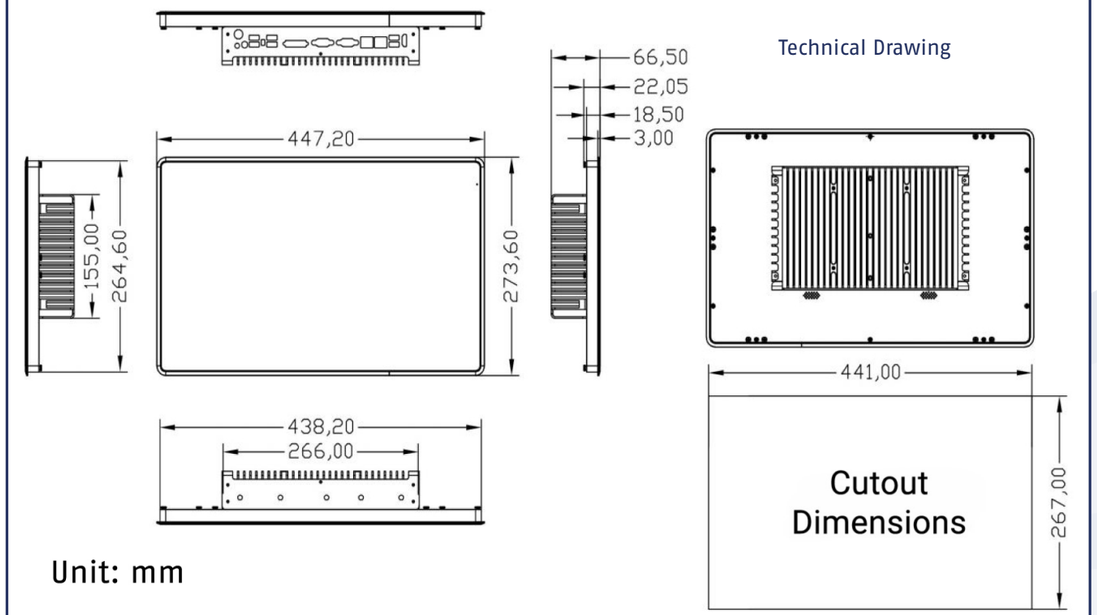

InoNet Competences and Services

Consulting *Development* *Testing* *Customization* *Manufacturing* *Certifications*

InoNet Computer GmbH
Wettersteinstraße 18
82024 Taufkirchen, Germany
www.inonet.com

www.inonet.com | Tel.: +49 89 / 666 096 - 0 | sales@inonet.com

Published: 03. September 2026, 15:31. Subject to be change without prior notice.

Lumina®-T215

Fanless 21.5“ Panel PC with Projected Capacitive Touchscreen

INONET
A EUROTECH COMPANY



Features

- *21.5“ Full HD TFT-LCD display*
- *Flexible CPU Options*
- *Fanless Design*
- *Multiple Interfaces*

TECHNICAL SPECIFICATIONS		
Display	**Type**	21.5“ TFT LCD
	Viewing Angle	85° H / 85° V
	Resolution	1920 x 1080
	Brightness	250 cd/m²
	MTBF Backlight	30,000 hours
Touchscreen	**Type**	Projected capacitive 10 point Touch
	Life Time	10 Million activations
Processor		see „Versions“
RAM		see „Versions“
Masse Storage	**Internal**	1x M.2 (M-key, type: 2280) 1x M.2 (M-key, type: 2242/2260/2280) 1x 2.5“
	Equipped with	see „Versions“
Expansions	**Internal**	1x M.2 (E-key, type: 2230) 1x M.2 (B-key, type: 3042/3052)
I/O	**LAN**	2x 1 GBit (RJ45) 2x 1 GBit (RJ45) optional
	USB	see „Versions“
	Serial	2x RS-232/422/485
	HDMI	1x
	Audio	1x Line-Out
	GPIO	optional via expansion port
Power Supply	**Input**	9 ~ 36 VDC
	External Power Supply	yes, DC 12V/5A
Environment	**Operating Temperature**	-10° ~ 60° C (with air flow)
	Storage Temperature	-20° ~ 70° C
	Relative Humidity	0 ~ 95 % (non condensing)
	Vibration	With SSD: 3 Grms, IEC 60068-2-64, random, 5 ~ 500 Hz, 1 hr/axis
	Shock	With SSD: 30 G, IEC 60068-2-27, half sine, 11 ms duration
IP Protection		IP65 Front
Mechanical	**Dimensions (W x H x D)**	514.86 x 311.17 x 66.5 mm
	Chassis	Aluminum
	Cooling	Passive
	Mounting	Panel (cutout dimensions W x H: 509 x 305 mm), VESA 100
Operating System		Microsoft® Windows® 11 IoT
Features		Watchdog Timer

Published: 01. October 2026, 15:17. Subject to be change without prior notice.

Lumina®-T215

Fanless 21.5“ Panel PC with Projected Capacitive Touchscreen

INONET
A EUROTECH COMPANY

VERSIONS			
Processor	Intel® Processor N100	Intel® Core™ i5-1235U	Intel® Core™ i7-1255U
RAM	8 GB DDR5 SO-DIMM, max. 16 GB	16 GB DDR4 SO-DIMM, max. 64 GB	16 GB DDR4 SO-DIMM, max. 64 GB
Mass Storage	256 GB SSD, 2.5“	512 GB SSD, 2.5“	1 TB SSD, 2.5“
USB	2x USB 3.0 4x USB 2.0	4x USB 3.0 2x USB 2.0	4x USB 3.0 2x USB 2.0
Item Number	**Lumina®-T215-Intel/N100**	**Lumina®-T215-Intel/i5-1235U**	**Lumina®-T215-Intel/i7-1255U**





Back



Top



I/O

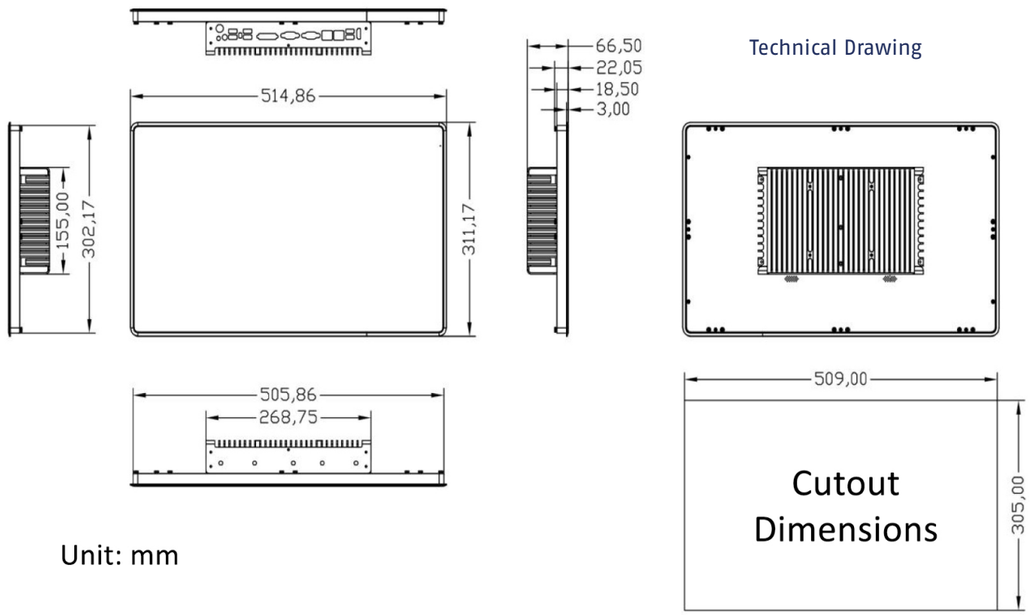

Technical Drawing

Unit: mm

InoNet Competences and Services

Consulting *Development* *Testing* *Customization* *Manufacturing* *Certifications*

ISO 9001

InoNet Computer GmbH
Wettersteinstraße 18
82024 Taufkirchen, Germany
www.inonet.com

www.inonet.com | Tel.: +49 89 / 666 096 - 0 | sales@inonet.com

Published: 01. October 2026, 15:17. Subject to be change without prior notice.

Lumina®-T238

Fanless 23.8“ Panel PC with Projected Capacitive Touchscreen

INONET
A EUROTECH COMPANY



Features

- *23.8“ Full HD TFT-LCD display*
- *Flexible CPU Options*
- *Fanless Design*
- *Multiple Interfaces*

TECHNICAL SPECIFICATIONS		
Display	**Type**	23.8“ TFT LCD
	Viewing Angle	85° H / 85° V
	Resolution	1920 x 1080
	Brightness	250 cd/m²
	MTBF Backlight	30,000 hours
Touchscreen	**Type**	Projected capacitive 10 point Touch
	Life Time	10 Million activations
Processor		see „Versions“
RAM		see „Versions“
Masse Storage	**Internal**	1x M.2 (M-key, type: 2280) 1x M.2 (M-key, type: 2242/2260/2280) 1x 2.5“
	Equipped with	see „Versions“
Expansions	**Internal**	1x M.2 (E-key, type: 2230) 1x M.2 (B-key, type: 3042/3052)
I/O	**LAN**	2x 1 GBit (RJ45) 2x 1 GBit (RJ45) optional
	USB	see „Versions“
	Serial	2x RS-232/422/485
	HDMI	1x
	Audio	1x Line-Out
	GPIO	optional via expansion port
Power Supply	**Input**	9 ~ 36 VDC
	External Power Supply	yes, DC 12V/5A
Environment	**Operating Temperature**	-10° ~ 60° C (with air flow)
	Storage Temperature	-20° ~ 70° C
	Relative Humidity	0 ~ 95 % (non condensing)
	Vibration	With SSD: 3 Grms, IEC 60068-2-64, random, 5 ~ 500 Hz, 1 hr/axis
	Shock	With SSD: 30 G, IEC 60068-2-27, half sine, 11 ms duration
IP Protection		IP65 Front
Mechanical	**Dimensions (W x H x D)**	566.44 x 340.42 x 66.5 mm
	Chassis	Aluminum
	Cooling	Passive
	Mounting	Panel (cutout dimensions W x H: 560 x 334 mm), VESA 75/100
Operating System		Microsoft® Windows® 11 IoT
Features		Watchdog Timer

Published: 03. September 2026, 15:31. Subject to be change without prior notice.

Lumina®-T238

Fanless 23.8“ Panel PC with Projected Capacitive Touchscreen

INONET
A EUROTECH COMPANY

VERSIONS			
Processor	Intel® Processor N100	Intel® Core™ i5-1235U	Intel® Core™ i7-1255U
RAM	8 GB DDR5 SO-DIMM, max. 16 GB	16 GB DDR4 SO-DIMM, max. 64 GB	16 GB DDR4 SO-DIMM, max. 64 GB
Mass Storage	256 GB SSD, 2.5“	512 GB SSD, 2.5“	1 TB SSD, 2.5“
USB	2x USB 3.0 4x USB 2.0	4x USB 3.0 2x USB 2.0	4x USB 3.0 2x USB 2.0
Item Number	**Lumina®-T238-Intel/N100**	**Lumina®-T238-Intel/i5-1235U**	**Lumina®-T238-Intel/i7-1255U**





Back



Top



I/O

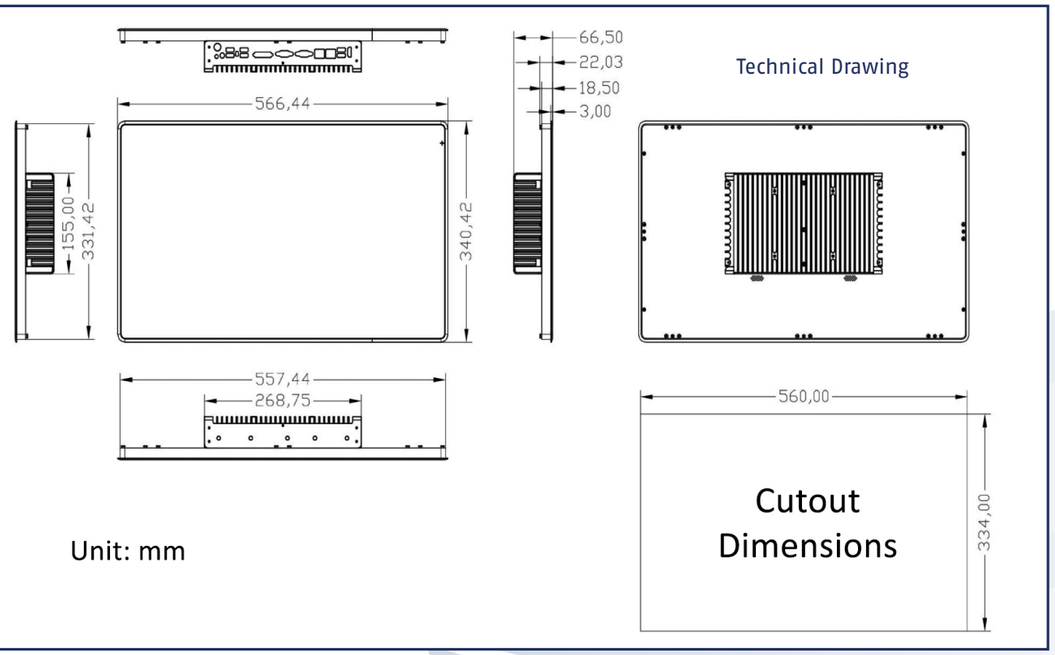

InoNet Competences and Services

Consulting | *Development* | *Testing* | *Customization* | *Manufacturing* | *Certifications*

InoNet Computer GmbH
Wettersteinstraße 18
82024 Taufkirchen, Germany
www.inonet.com

www.inonet.com | Tel.: +49 89 / 666 096 - 0 | sales@inonet.com

Published: 03. September 2026, 15:31. Subject to be change without prior notice.

Lumina®S-T101

Fanless 10.1“ Panel PC with Projected Capacitive Touchcreen

INONET
A EUROTECH COMPANY



Features

- *10.1“ TFT-LCD display*
- *Flexible CPU Options (Intel® Core™ Ultra)*
- *Fanless Design*
- *Multiple Interfaces*

TECHNICAL SPECIFICATIONS		
Display	**Type**	10.1“ TFT LCD
	Viewing Angle	89° H / 89° V
	Resolution	1280 x 800
	Brightness	400 cd/m²
	Contrast	800 : 1
	MTBF Backlight	30,000 hours
Touchscreen		Projected capacitive 10 point Touch
Processor		see „Versions“
RAM		see „Versions“
Masse Storage	**Internal**	1x M.2 (M-key, type: 2280)
	Equipped with	see „Versions“
Expansions	**Internal**	1x M.2 (E-key, type: 2230) 1x M.2 (B-key, type: 3042/3052)
	Externl	1x SIM slot
I/O	**LAN**	3x 2.5 GBit (RJ45)
	USB	2x USB 3.2 (Gen 1) 1x USB-C 3.2 1x USB 2.0
	Serial	1x RS-232/422/485 1x RS-232
	DisplayPort	2x
	Audio	1x Line-Out 1x Mic
Power Supply	**Input**	12 ~ 24 VDC
	External Power Supply	yes, DC 20V/7,5A, 150 Watt
Environment	**Operating Temperature**	-10° ~ 50° C
	Storage Temperature	-20° ~ 60° C
	Relative Humidity	10 ~ 80 % (non condensing)
	Vibration	With SSD: 3 Grms, IEC 60068-2-64, 5 ~ 500 Hz, 30 min/axis
	Shock	With SSD: 20 G, IEC 60068-2-27, half sine, 11 ms duration
IP Protection		IP65 Front
Mechanical	**Dimensions (W x H x D)**	256 x 170 x 57 mm
	Cooling	Passive
	Mounting	VESA 75/100, Panel optional (cutout dimensions W x H: 249 x 163 mm)
Operating System		Microsoft® Windows® 11 IoT
Features		Watchdog Timer, dTPM 2.0, fTPM 2.0

Published: 03. September 2026, 14:40. Subject to be change without prior notice.

Lumina®S-T101

Fanless 10.1“ Panel PC with Projected Capacitive Touchcreen

INONET
A EUROTECH COMPANY

VERSIONS		
Processor	Intel® Core™ Ultra 5 125U	Intel® Core™ Ultra 7 155U
RAM	16 GB DDR5 SO-DIMM, max. 48 GB	16 GB DDR5 SO-DIMM, max. 48 GB
Mass Storage	512 GB SSD, M.2	1 TB SSD, M.2
Item Number	**Lumina®S-T101-Intel/U5-125U**	**Lumina®S-T101-Intel/U7-155U**





Back

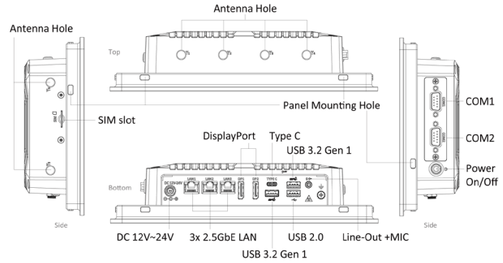

Technical Drawing

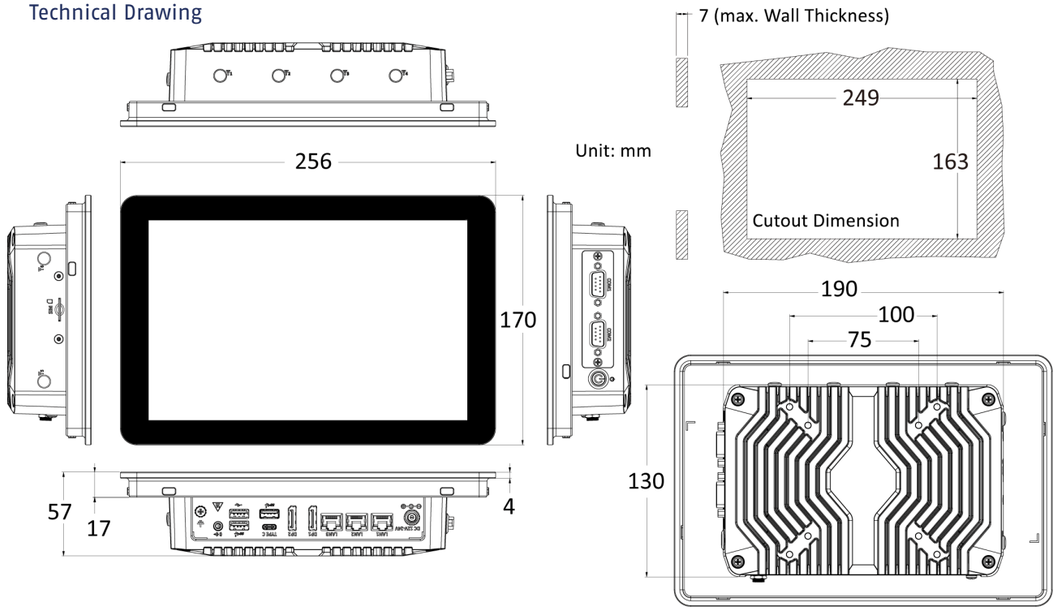

InoNet Competences and Services

Consulting *Development* *Testing* *Customization* *Manufacturing* *Certifications*

ISO 9001

InoNet Computer GmbH
Wettersteinstraße 18
82024 Taufkirchen, Germany
www.inonet.com

www.inonet.com | Tel.: +49 89 / 666 096 - 0 | sales@inonet.com

Published: 03. September 2026, 14:40. Subject to be change without prior notice.

Lumina®S-T156

Fanless 15.6“ Panel PC with Projected Capacitive Touchcreen

INONET
A EUROTECH COMPANY



Features

- *15.6“ Full HD TFT-LCD display*
- *Flexible CPU Options (Intel® Core™ Ultra)*
- *Fanless Design*
- *Multiple Interfaces*

TECHNICAL SPECIFICATIONS		
Display	**Type**	15.6“ TFT LCD
	Viewing Angle	85° H / 85° V
	Resolution	1920 x 1080
	Brightness	400 cd/m²
	Contrast	800 : 1
	MTBF Backlight	30,000 hours
Touchscreen		Projected capacitive 10 point Touch
Processor		see „Versions“
RAM		see „Versions“
Masse Storage	**Internal**	1x M.2 (M-key, type: 2280)
	Equipped with	see „Versions“
Expansions	**Internal**	1x M.2 (E-key, type: 2230) 1x M.2 (B-key, type: 3042/3052)
	Externl	1x SIM slot
I/O	**LAN**	3x 2.5 GBit (RJ45)
	USB	2x USB 3.2 (Gen 1) 1x USB-C 3.2 1x USB 2.0
	Serial	1x RS-232/422/485 1x RS-232
	DisplayPort	2x
	Audio	1x Line-Out 1x Mic
Power Supply	**Input**	12 ~ 24 VDC
	External Power Supply	yes, DC 20V/7,5A, 150 Watt
Environment	**Operating Temperature**	-10° ~ 50° C
	Storage Temperature	-20° ~ 60° C
	Relative Humidity	10 ~ 80 % (non condensing)
	Vibration	With SSD: 3 Grms, IEC 60068-2-64, 5 ~ 500 Hz, 30 min/axis
	Shock	With SSD: 20 G, IEC 60068-2-27, half sine, 11 ms duration
IP Protection		IP65 Front
Mechanical	**Dimensions (W x H x D)**	400 x 249 x 57 mm
	Cooling	Passive
	Mounting	VESA 75/100, Panel optional (cutout dimensions W x H: 394 x 243 mm)
Operating System		Microsoft® Windows® 11 IoT
Features		Watchdog Timer, dTPM 2.0, fTPM 2.0

Published: 01. September 2026, 10:40. Subject to be change without prior notice.

Lumina®S-T156
Fanless 15.6“ Panel PC with Projected Capacitive Touchcreen
INONET A EUROTECH COMPANY

VERSIONS		
Processor	Intel® Core™ Ultra 5 125U	Intel® Core™ Ultra 7 155U
RAM	16 GB DDR5 SO-DIMM, max. 48 GB	16 GB DDR5 SO-DIMM, max. 48 GB
Mass Storage	512 GB SSD, M.2	1 TB SSD, M.2
Item Number	**Lumina®S-T156-Intel/U5-125U**	**Lumina®S-T156-Intel/U7-155U**

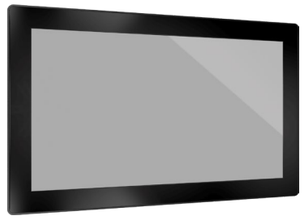



Back

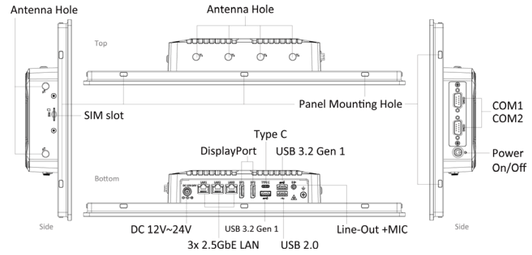

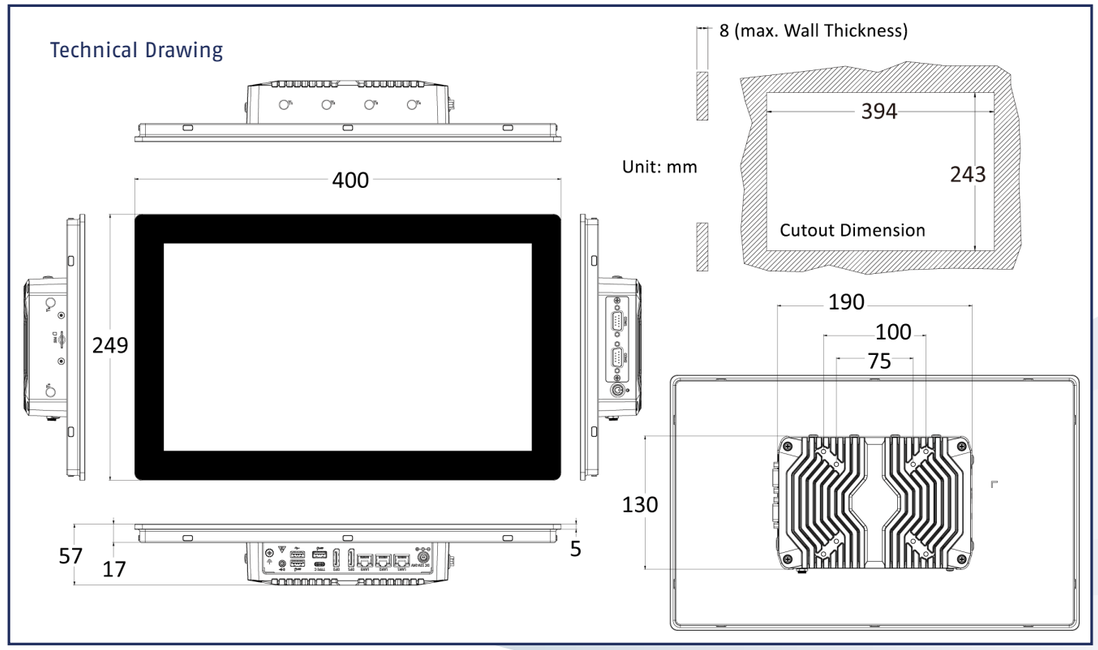

InoNet Competences and Services

Consulting | *Development* | *Testing* | *Customization* | *Manufacturing* | *Certifications*

ISO 9001

InoNet Computer GmbH
Wettersteinstraße 18
82024 Taufkirchen, Germany
www.inonet.com

www.inonet.com | Tel.: +49 89 / 666 096 - 0 | sales@inonet.com

Published: 01. September 2026, 10:40. Subject to be change without prior notice.

Lumina®S-T215

Fanless 21.5“ Panel PC with Projected Capacitive Touchcreen

INONET
A EUROTECH COMPANY



Features

- *21.5“ Full HD TFT-LCD display*
- *Flexible CPU Options (Intel® Core™ Ultra)*
- *Fanless Design*
- *Multiple Interfaces*

TECHNICAL SPECIFICATIONS		
Display	**Type**	21.5“ TFT LCD
	Viewing Angle	89° H / 89° V
	Resolution	1920 x 1080
	Brightness	500 cd/m²
	Contrast	1000 : 1
	MTBF Backlight	50,000 hours
Touchscreen		Projected capacitive 10 point Touch
Processor		see „Versions“
RAM		see „Versions“
Masse Storage	**Internal**	1x M.2 (M-key, type: 2280)
	Equipped with	see „Versions“
Expansions	**Internal**	1x M.2 (E-key, type: 2230) 1x M.2 (B-key, type: 3042/3052)
	Externl	1x SIM slot
I/O	**LAN**	3x 2.5 GBit (RJ45)
	USB	2x USB 3.2 (Gen 1) 1x USB-C 3.2 1x USB 2.0
	Serial	1x RS-232/422/485 1x RS-232
	DisplayPort	2x
	Audio	1x Line-Out 1x Mic
Power Supply	**Input**	12 ~ 24 VDC
	External Power Supply	yes, DC 20V/7,5A, 150 Watt
Environment	**Operating Temperature**	-10° ~ 50° C
	Storage Temperature	-20° ~ 60° C
	Relative Humidity	10 ~ 80 % (non condensing)
	Vibration	With SSD: 3 Grms, IEC 60068-2-64, 5 ~ 500 Hz, 30 min/axis
	Shock	With SSD: 20 G, IEC 60068-2-27, half sine, 11 ms duration
IP Protection		IP65 Front
Mechanical	**Dimensions (W x H x D)**	538 x 329 x 69 mm
	Cooling	Passive
	Mounting	VESA 75/100, Panel optional (cutout dimensions W x H: 528 x 318 mm)
Operating System		Microsoft® Windows® 11 IoT
Features		Watchdog Timer, dTPM 2.0, fTPM 2.0

Published: 08. September 2026, 08:56. Subject to be change without prior notice.

Lumina®S-T215
Fanless 21.5“ Panel PC with Projected Capacitive Touchcreen
INONET A EUROTECH COMPANY

VERSIONS		
Processor	Intel® Core™ Ultra 5 125U	Intel® Core™ Ultra 7 155U
RAM	16 GB DDR5 SO-DIMM, max. 48 GB	16 GB DDR5 SO-DIMM, max. 48 GB
Mass Storage	512 GB SSD, M.2	1 TB SSD, M.2
Item Number	**Lumina®S-T215-Intel/U5-125U**	**Lumina®S-T215-Intel/U7-155U**



Back

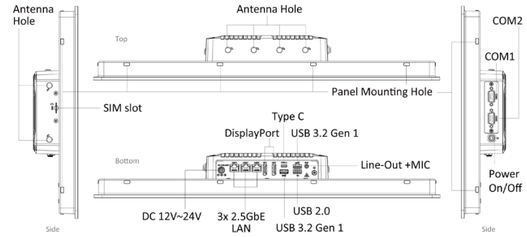

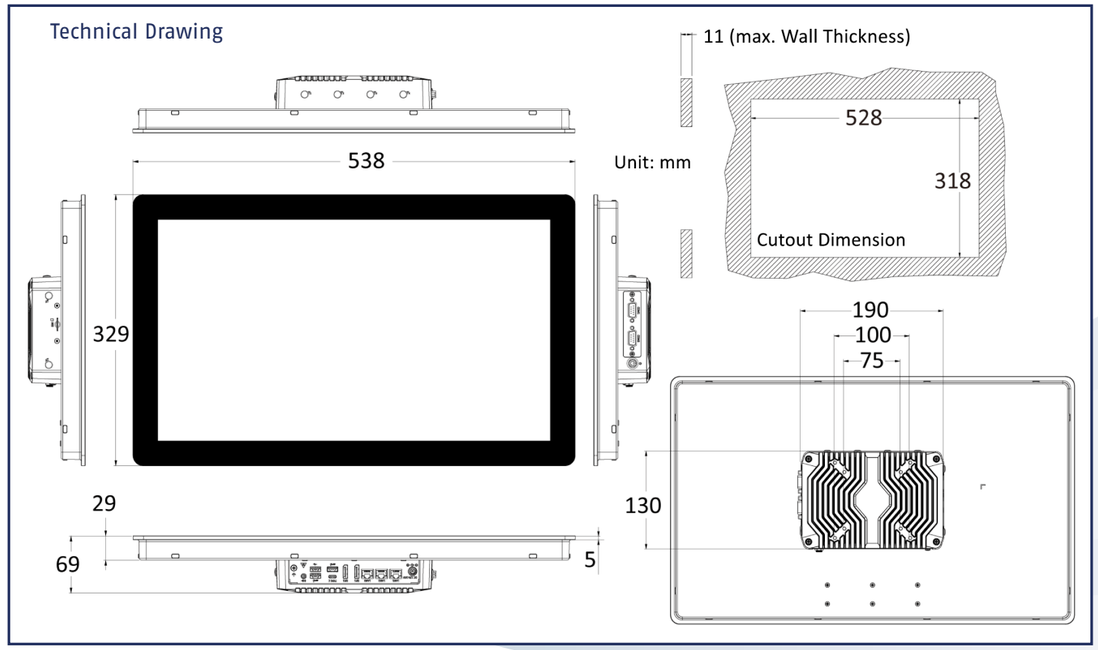

InoNet Competences and Services

Consulting | *Development* | *Testing* | *Customization* | *Manufacturing* | *Certifications*

ISO 9001

InoNet Computer GmbH
Wettersteinstraße 18
82024 Taufkirchen, Germany
www.inonet.com

www.inonet.com | Tel.: +49 89 / 666 096 - 0 | sales@inonet.com

Published: 08. September 2026, 08:56. Subject to be change without prior notice.

Radiance®-T101

10.1“ Industrial Display with Projected Capacitive Touchscreen

INONET
A EUROTECH COMPANY



Features

- *10.1“ TFT-LCD display*
- *IP65 Front*
- *Fanless Design*
- *Operating Temperature -20° ~ 70° C*

TECHNICAL SPECIFICATIONS		
Display	**Type**	10.1“ TFT LCD
	Viewing Angle	85° H / 85° V
	Resolution	1280 x 800
	Brightness	400 cd/m²
	Contrast	900 : 1
	Colors	16.7 Million
	Backlight Type	LED
	MTBF Backlight	30,000 hours
Touchscreen	**Type**	Projected capacitive 10 point Touch
	Connection	USB 2.0
	Light Transmittance	> 85%
	Life Time	10 Million activations
I/O	**VGA**	1x
	HDMI	1x
Power Supply	**Input**	9 ~ 28 VDC
	Connection	2 pin Phoenix
	External Power Supply	yes
Environment	**Operating Temperature**	-20° ~ 70° C
	Storage Temperature	-30° ~ 80° C
	Relative Humidity	10 ~ 95 % (non condensing)
	Vibration	1.5 Grms, random, 5 ~ 500 Hz, 1 hr/axis
	Shock	10 G, 11 ms duration
IP Protection		IP65 Front
Mechanical	**Dimensions (W x H x D)**	283.2 x 186.9 x 41.4 mm
	Cooling	Passive
	Mounting	Panel (cutout dimensions W x H: 275 x 179 mm), VESA 75

Published: 03. September 2026, 15:29. Subject to be change without prior notice.

Radiance®-T101
10.1“ Industrial Display with Projected Capacitive Touchscreen
INONET
A EUROTECH COMPANY





I/O



Back

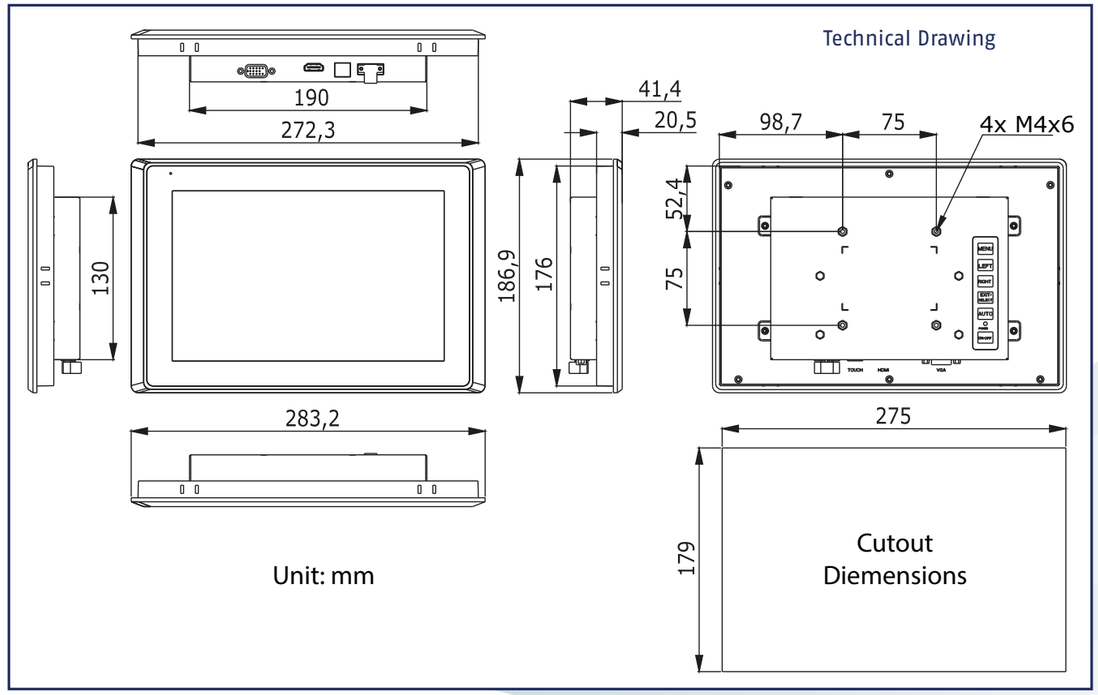

InoNet Competences and Services

Consulting | *Development* | *Testing* | *Customization* | *Manufacturing* | *Certifications*

ISO 9001

InoNet Computer GmbH
Wettersteinstraße 18
82024 Taufkirchen, Germany
www.inonet.com

www.inonet.com | Tel.: +49 89 / 666 096 - 0 | sales@inonet.com

Published: 03. September 2026, 15:29. Subject to be change without prior notice.

Radiance®-T156

15.6“ Industrial Display with Projected Capacitive Touchscreen

INONET
A EUROTECH COMPANY



Features

- *15.6“ Full HD TFT-LCD display*
- *IP65 Front*
- *Fanless Design*
- *Operating Temperature -10° ~ 50° C*

TECHNICAL SPECIFICATIONS		
Display	**Type**	15.6“ TFT LCD
	Viewing Angle	85° H / 85° V
	Resolution	1920 x 1080
	Brightness	300 cd/m²
	Contrast	800 : 1
	Colors	16.7 Million
	Backlight Type	LED
	MTBF Backlight	30,000 hours
Touchscreen	**Type**	Projected capacitive 10 point Touch
	Connection	USB 2.0
	Light Transmittance	> 85%
	Life Time	10 Million activations
I/O	**VGA**	1x
	HDMI	1x
Power Supply	**Input**	9 ~ 28 VDC
	Connection	2 pin Phoenix
	External Power Supply	yes
Environment	**Operating Temperature**	-10° ~ 50° C
	Storage Temperature	-20° ~ 60° C
	Relative Humidity	10 ~ 95 % (non condensing)
	Vibration	1.5 Grms, random, 5 ~ 500 Hz, 1 hr/axis
	Shock	10 G, 11 ms duration
IP Protection		IP65 Front
Mechanical	**Dimensions (W x H x D)**	397.27 x 255.27 x 41.3 mm
	Cooling	Passive
	Mounting	Panel (cutout dimensions W x H: 386 x 244 mm), VESA 75

Published: 03. September 2026, 16:42. Subject to be change without prior notice.

Radiance®-T156
15.6“ Industrial Display with Projected Capacitive Touchscreen
INONET
A EUROTECH COMPANY

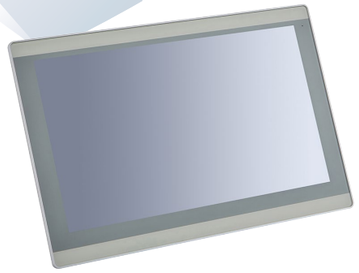

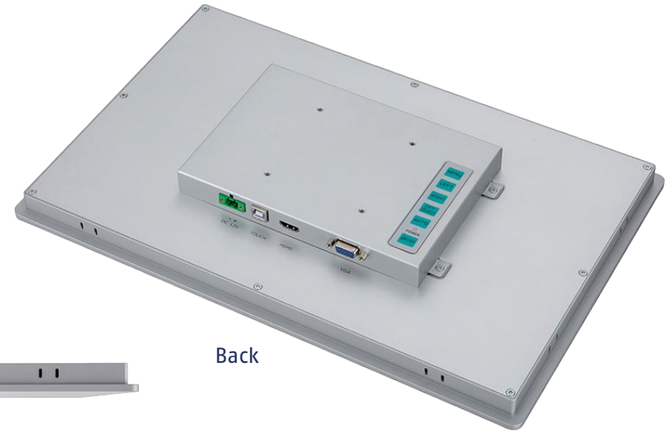

Back



I/O

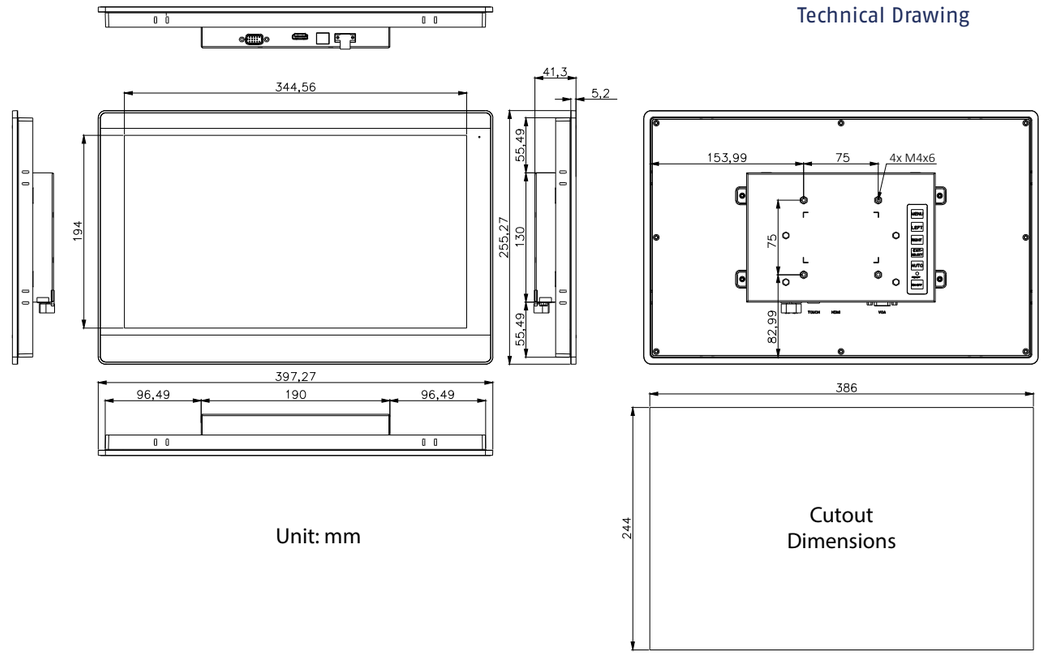

Technical Drawing

Unit: mm

Cutout Dimensions

InoNet Competences and Services

Consulting *Development* *Testing* *Customization* *Manufacturing* *Certifications*

InoNet Computer GmbH
Wettersteinstraße 18
82024 Taufkirchen, Germany
www.inonet.com

www.inonet.com | Tel.: +49 89 / 666 096 - 0 | sales@inonet.com

Published: 03. September 2026, 16:42. Subject to be change without prior notice.

Radiance®-T185

18.5“ Industrial Display with Projected Capacitive Touchscreen

INONET
A EUROTECH COMPANY



Features

- *18.5“ Full HD TFT-LCD display*
- *IP65 Front*
- *Fanless Design*
- *Operating Temperature 0° ~ 50° C*

TECHNICAL SPECIFICATIONS		
Display	**Type**	18.5“ TFT LCD
	Viewing Angle	85° H / 85° V
	Resolution	1920 x 1080
	Brightness	250 cd/m²
	Contrast	800 : 1
	Colors	16.7 Million
	Backlight Type	LED
	MTBF Backlight	30,000 hours
Touchscreen	**Type**	Projected capacitive 10 point Touch
	Connection	USB 2.0
	Light Transmittance	> 85%
	Life Time	10 Million activations
I/O	**VGA**	1x
	HDMI	1x
Power Supply	**Input**	9 ~ 28 VDC
	Connection	2 pin Phoenix
	External Power Supply	yes
Environment	**Operating Temperature**	0° ~ 50° C
	Storage Temperature	-20° ~ 60° C
	Relative Humidity	10 ~ 95 % (non condensing)
	Vibration	1.5 Grms, random, 5 ~ 500 Hz, 1 hr/axis
	Shock	10 G, 11 ms duration
IP Protection		IP65 Front
Mechanical	**Dimensions (W x H x D)**	472 x 301.5 x 45 mm
	Cooling	Passive
	Mounting	Panel (cutout dimensions W x H: 461 x 290.5 mm), VESA 75

Published: 03. September 2026, 16:43. Subject to be change without prior notice.

Radiance®-T185

18.5“ Industrial Display with Projected Capacitive Touchscreen

INONET
A EUROTECH COMPANY



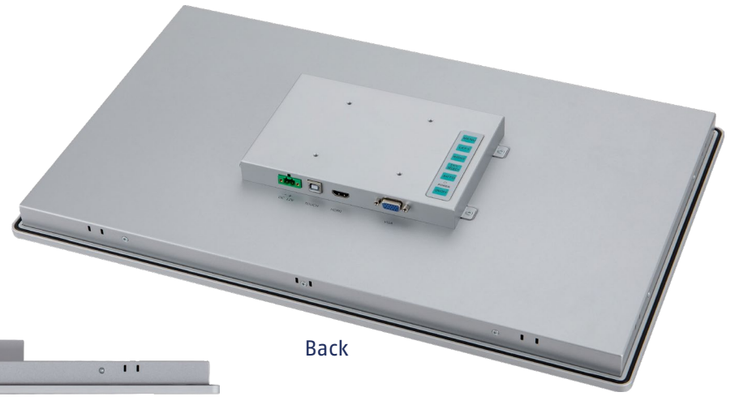

Back



I/O

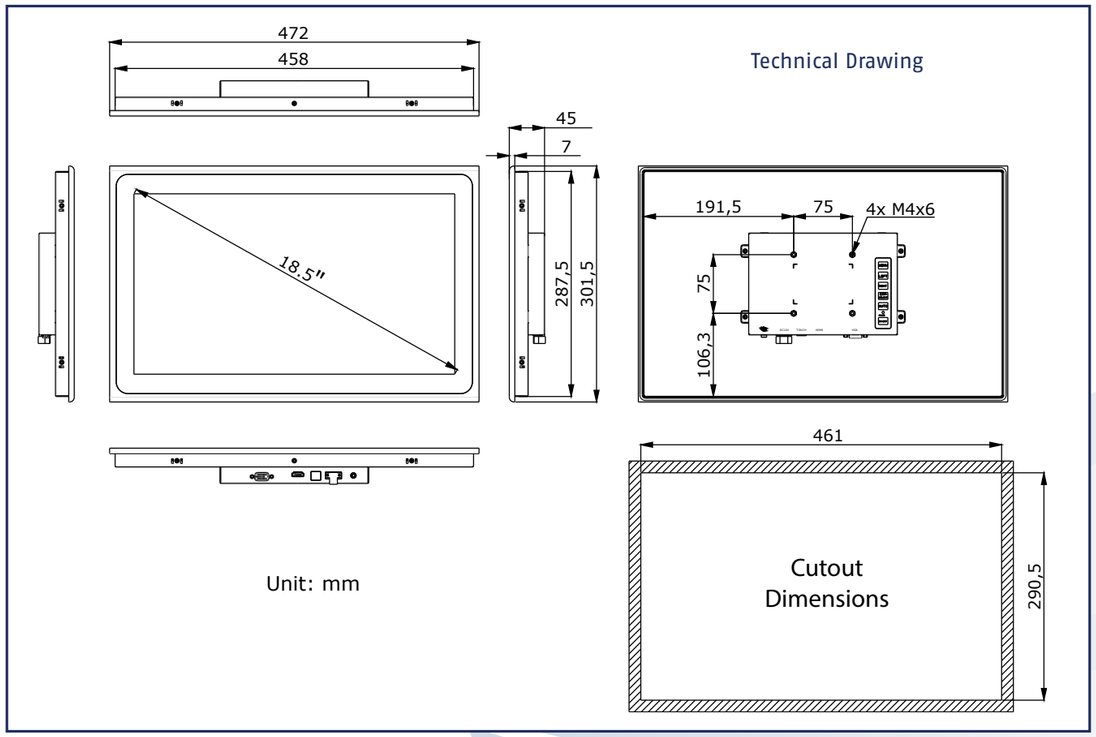

Technical Drawing

Unit: mm

InoNet Competences and Services

Consulting | *Development* | *Testing* | *Customization* | *Manufacturing* | *Certifications*

InoNet Computer GmbH
Wettersteinstraße 18
82024 Taufkirchen, Germany
www.inonet.com

www.inonet.com | Tel.: +49 89 / 666 096 - 0 | sales@inonet.com

Published: 03. September 2026, 16:43. Subject to be change without prior notice.

Radiance®-T215

21.5“ Industrial Display with Projected Capacitive Touchscreen

INONET
A EUROTECH COMPANY



Features

- *21.5“ Full HD TFT-LCD display*
- *IP65 Front*
- *Fanless Design*
- *Operating Temperature -10° ~ 50° C*

TECHNICAL SPECIFICATIONS		
Display	**Type**	21.5“ TFT LCD
	Viewing Angle	89° H / 89° V
	Resolution	1920 x 1080
	Brightness	250 cd/m²
	Contrast	1000 : 1
	Colors	16.7 Million
	Backlight Type	LED
	MTBF Backlight	30,000 hours
Touchscreen	**Type**	Projected capacitive 10 point Touch
	Connection	USB 2.0
	Light Transmittance	> 85%
	Life Time	10 Million activations
I/O	**VGA**	1x
	HDMI	1x
Power Supply	**Input**	9 ~ 28 VDC
	Connection	2 pin Phoenix
	External Power Supply	yes
Environment	**Operating Temperature**	-10° ~ 50° C
	Storage Temperature	-20° ~ 60° C
	Relative Humidity	10 ~ 95 % (non condensing)
	Vibration	1.5 Grms, random, 5 ~ 500 Hz, 1 hr/axis
	Shock	10 G, 11 ms duration
IP Protection		IP65 Front
Mechanical	**Dimensions (W x H x D)**	536.15 x 329.40 x 51 mm
	Cooling	Passive
	Mounting	Panel (cutout dimensions W x H: 520 x 313 mm), VESA 75

Published: 03. September 2026, 16:40. Subject to be change without prior notice.

Radiance®-T215
21.5“ Industrial Display with Projected Capacitive Touchscreen
INONET
A EUROTECH COMPANY





Back



I/O

Technical Drawing

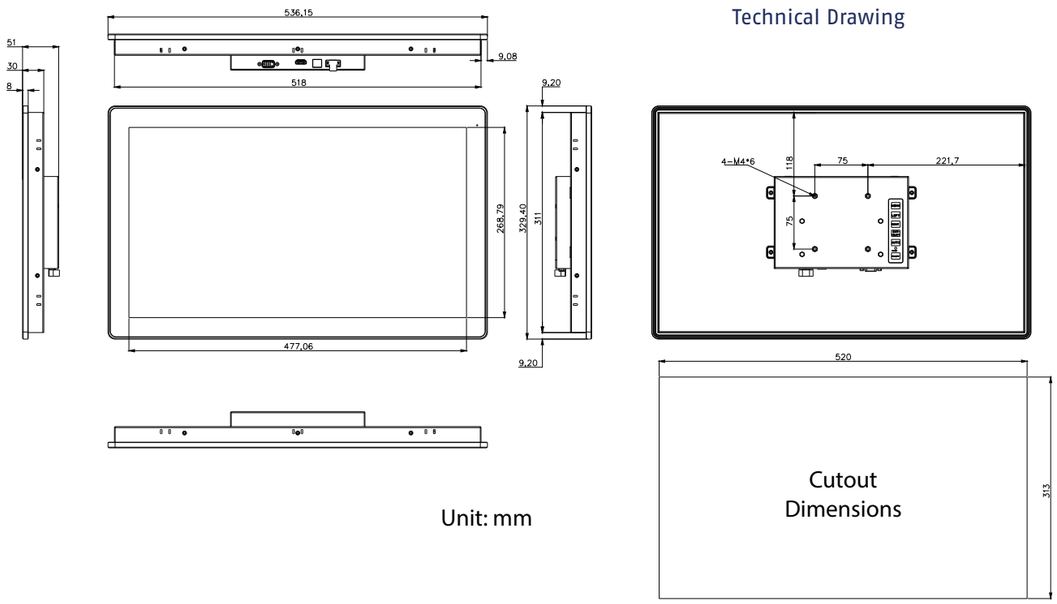

Unit: mm

Cutout Dimensions

InoNet Competences and Services

Consulting | *Development* | *Testing* | *Customization* | *Manufacturing* | *Certifications*

InoNet Computer GmbH
Wettersteinstraße 18
82024 Taufkirchen, Germany
www.inonet.com

www.inonet.com | Tel.: +49 89 / 666 096 - 0 | sales@inonet.com

Published: 03. September 2026, 16:40. Subject to be change without prior notice.

Radiance®-T238

23.8“ Industrial Display with Projected Capacitive Touchscreen

INONET
A EUROTECH COMPANY



Features

- *23.8“ Full HD TFT-LCD display*
- *IP65 Front*
- *Fanless Design*
- *Operating Temperature -10° ~ 50° C*

TECHNICAL SPECIFICATIONS		
Display	**Type**	23.8“ TFT LCD
	Viewing Angle	89° H / 89° V
	Resolution	1920 x 1080
	Brightness	250 cd/m²
	Contrast	1000 : 1
	Colors	16.7 Million
	Backlight Type	LED
	MTBF Backlight	30,000 hours
Touchscreen	**Type**	Projected capacitive 10 point Touch
	Connection	USB 2.0
	Light Transmittance	> 85%
	Life Time	10 Million activations
I/O	**VGA**	1x
	HDMI	1x
Power Supply	**Input**	9 ~ 28 VDC
	Connection	2 pin Phoenix
	External Power Supply	yes
Environment	**Operating Temperature**	-10° ~ 50° C
	Storage Temperature	-20° ~ 60° C
	Relative Humidity	10 ~ 95 % (non condensing)
	Vibration	1.5 Grms, random, 5 ~ 500 Hz, 1 hr/axis
	Shock	10 G, 11 ms duration
IP Protection		IP65 Front
Mechanical	**Dimensions (W x H x D)**	581.9 x 356.9 x 49.5 mm
	Cooling	Passive
	Mounting	Panel (cutout dimensions W x H: 567.7 x 340.6 mm), VESA 75

Published: 03. September 2026, 16:54. Subject to be change without prior notice.

Radiance®-T238
23.8“ Industrial Display with Projected Capacitive Touchscreen
INONET
A EUROTECH COMPANY





Back

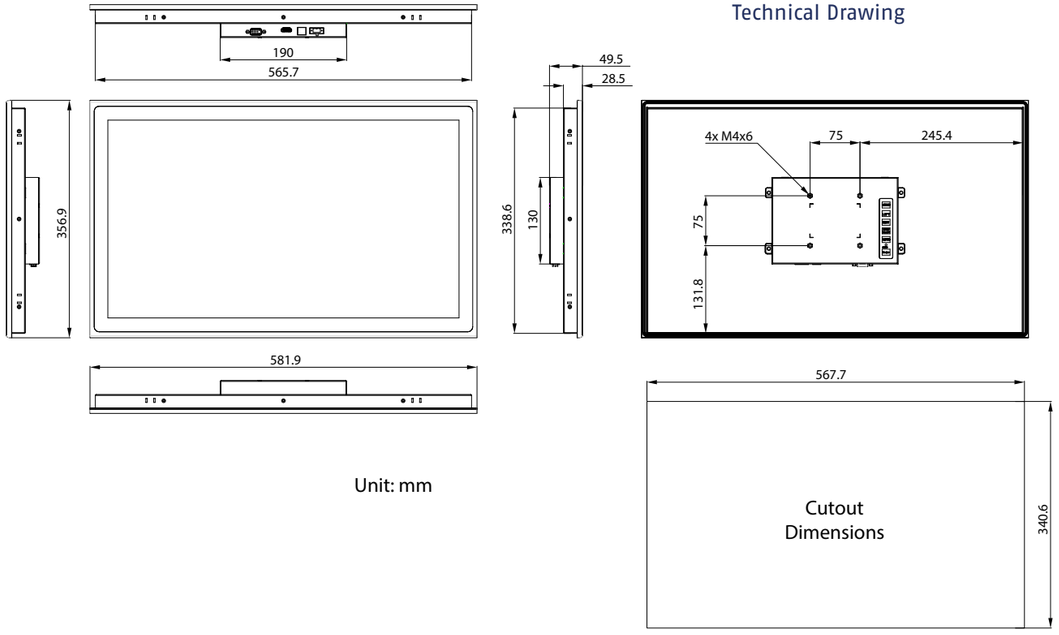

InoNet Competences and Services

Consulting *Development* *Testing* *Customization* *Manufacturing* *Certifications*

InoNet Computer GmbH
Wettersteinstraße 18
82024 Taufkirchen, Germany
www.inonet.com

www.inonet.com | Tel.: +49 89 / 666 096 - 0 | sales@inonet.com

Published: 03. September 2026, 16:54. Subject to be change without prior notice.